WATSON TATE SAVORY

architecture interiors planning

ADDENDUM NO.: ONE DATE: November 1 2017

PROJECT TITLE: **USC Lieber College HVAC Renovation**
**H27-Z313**
University of South Carolina

WRITTEN BY: J. Sanders Tate, AIA NCARB

TO: Prospective Bidders / Plan Holders

---

This addendum is issued pursuant to Article 1.1.1 of the AIA General Conditions of the Contract (A201) in connection with the revision of Bidding Documents which have been previously issued.
Addenda are issued prior to execution of Contract. All instructions contained herein shall be reflected in the Contract Sum and this Addendum will be made a part of the Contract Documents, if, as, and when a Construction Contract is awarded.

This Addendum forms a part of the Contract Documents and modifies the original documents as noted below. Acknowledge receipt of this Addendum in this space provided on the Bid Form. Failure to do so will subject the Bidder to disqualification.

This Addendum consists of 2 pages, Pre-Bid sign-in sheet (2 pages), Hazardous Material Survey (2 pages), plus replacement of Mechanical (M) drawings as listed below:

**REVISED DATE FOR BID OPENING**:

1. Bid Opening has been postponed until November 30, 2017 at same time and location. New closing date for questions and substitution requests is 5pm on November 17, 2017. All other requirements for the Bid as described in the Contract Documents remain the same.

**ADDITIONAL SITE VISIT**:

1. Bidders will be allowed to visit Lieber College for an additional non-mandatory site visit on Tuesday, November 14 at 11 am. Meet in the lobby.

**PRE-BID MEETING:**

1. A non-mandatory pre-bid meeting was held at 1300 Pickens Street Columbia, SC at 10 am on October 25, 2007. A sign-in sheet from that meeting is attached as a part of this addendum.

**REVISIONS TO THE PROJECT MANUAL**:

1. See the attached Hazardous Material Survey information provided by the Owner. **NOTE**: Contractor shall not handle any hazardous materials. USC will handle all Hazardous Materials. Contractor shall advise USC Project Manager whenever they encounter suspicious material and USC shall manage it.

1316 Washington Street, Columbia, 29201
803.799.5181

2. Refer to specification section 23 00 00 Mechanical, General; paragraph 3.10 Warranty. Add paragraph 3.10 C to read, "All fan coil units and Outside Air Energy Recovery Unit (OAH-1) purchased by the Owner shall be included in the Contractor's one year warranty. Labor for installation of replacement parts furnished under the Vendor's one year warranty shall be included in the Contractor's one year warranty."
3. Refer to specifications section 23 72 13 Outdoor Air Energy Recovery Unit, under 2.2 Manufacturer, paragraph 2.2 B, change "The unit shall be a Munters model number ..." to read "The unit shall be a Daikin model number ..."

**REVISIONS TO THE DRAWINGS**:

1. Sheet A5 – delete all reference to paint by Owner at finish schedule and details. All new gypsum board work, doors, door frames, and other new work to be painted by Contractor in this contract.

2. Delete drawings M-1-S, M-001, M-002, M-003, M-1-D, M-2-D, M-3-D, M-4-D, M-1-P, M-1-R, M-2-P, M-2-R, M-3-P, M-3-R, M-4-P, and M-4-R; and replace them with the attached M-1-S, M-001, M-002, M-003, M-1-D, M-2-D, M-3-D, M-4-D, M-1-P, M-1-R, M-2-P, M-2-R, M-3-P, M-3-R, M-4-P, and M-4-R.

**END OF ADDENDUM**

# FM00520298 *FM00520298* USC Work Order

**Description** HAZMAT SURVEY - LIEBER COLLEGE HVAC REPLACEMENT

| | | | |
|---|---|---|---|
| **Site** | COLUMBIA | **Assigned To** | JPROVENCE |
| **Building** | 074 LIEBER COLLEGE | **Crew** | HAZMAT |
| **Floor** | **Room:** | **Start Date** | **Priority** 3 |
| **Equipment** | | **Due date** | 22-JUN-16 |
| | | **Request Date** | 08-JUN-16 **by** JABRAMS |

**Request #** FM00520298 **Description** HAZMAT SURVEY - LIEBER COLLEGE HVAC REPLACEMENT
**Parent WO #**

**CP Number** 50002876 FY16 - E&GMR - LIEBER - INVESTIGATION/REPORT OF HUMIDITY CONTROL

**State/Internal Project Number** H27-Z253

| | | | |
|---|---|---|---|
| **Requestor** | ABRAMS,JEFF | **Project Manager** | ABRAMS, JEFFREY R |
| **Telephone** | 239-8074 | **Telephone** | 777-3594 |
| **Alternate** | | **Estimated Cost** | $ 1,150.00 |
| **Telephone** | | **Billing** | FIXED PRICE |
| **Non-Available Time** | | 53200-W258-57120 | (FY16-INVESTIGATION & REPORT OF HUMIDITY) |

**Task List**

ERIC, WE HAVE ALLOCATED $1,150 NOT-TO-EXCEED FOR HAZMAT SURVEY AND ABATEMENT ESTIMATE. THANK YOU, JEFF ABRAMS, JUN 8, 2016.

| | |
|---|---|
| **DATE WORK STARTED** | **CAUSE** |
| **DATE WORK COMPLETED** | **CONDITION** |
| **EQUIPMENT** | |
| **CLOSING REMARKS** | |

**BENCHSTOCK MATERIALS**

| Qty | Description | Price Per Unit |
|---|---|---|
| | | |
| | | |
| | | |
| | | |

**Supervisor's Approval**

| Note Date | Title |
|---|---|
| **21-JUN-16** | **HAZMAT SURVEY RESULTS** |

SURVEY DATE: 6/16/16

INSPECTOR #: DARRYL WASHINGTON II (BI-00568) AND ERIC MELARO (BI-01296)

STATUS: SCOPE OF WORK FOR THIS PROJECT CONSISTS OF UPGRADING THE HVAC SYSTEM IN LIEBER COLLEGE THIS INCLUDES (1) CONSTRUCTING A MECHANICAL ROOM TO HOUSE AN AIR HANDLER UNIT ON THE FOURTH FLOOR, (2) ADDING SOFFITS ON THE FIRST AND FOURTH FLOORS, (3) REPLACING FAN COIL UNITS THROUGHOUT THE BUILDING, (4) ADDING VAV BOXES ABOVE THE CEILING IN SOME LOCATIONS, (5) REWORKING CHILL WATER PIPING IN MECHANICAL ROOM 111 AND THROUGHOUT THE BUILDING, (5) REPLACING CEILING TILE, (6) REPLACING THE DORMER WINDOW ON THE SOUTHEAST CORNER OF THE BUILDING WITH A LOUVER, AND (7) CREATING A FRESH AIR SUPPLY DUCT IN THE BUILDING'S CENTRAL CHASE. THE FOLLOWING MATERIALS HAVE BEEN TESTED FOR ASBESTOS AND LEAD AND RESULTS FOLLOW.

ASBESTOS SECTION:
WHITE MASTIC ON CHILL WATER LINES ( MECHANICAL ROOM 111) - POSITIVE FOR ASBESTOS
12X12 FLOOR TILE AND BLACK MASTIC (4TH FLOOR BREAK ROOM AND CLOSET) - POSITIVE FOR ASBESTOS
CHILL WATER LINES-DEEMED POSITIVE FOR ASBESTOS

JOINT COMPOUND (ALL OF THE BUILDING) - NEGATIVE FOR ASBESTOS
SHEETROCK (ALL OF THE BUILDING) - NEGATIVE FOR ASBESTOS
2X2 CEILING TILE- NEGATIVE FOR ASBESTOS
TAN VINYL BASE AND GLUE (4TH FLOOR KITCHEN AND ROOM 402) - NEGATIVE FOR ASBESTOS
PLASTER (ALL OF THE BUILDING EXCEPT ROOM 305) - NEGATIVE FOR ASBESTOS

LEAD SECTION:
OFF WHITE PLASTER PAINT- NEGATIVE FOR LEAD

INSPECTOR'S NOTES:
- ASBESTOS JOINT COMPOUND WAS PREVIOUSLY FOUND ON PLASTER BEHIND SHEETROCK ON THE WEST WALL IN ROOM 305 AND SHOULD NOT BE DISTURBED. AS A RESULT, THE PLASTER WALLS IN ROOM 305 ARE DEEMED POSITIVE FOR ASBESTOS. INSPECTORS LOOKED IN NUMEROUS LOCATIONS IN THE BUILDING AND DID NOT SEE THE SAME SCENARIO. DURING WORK IF THIS IS FOUND IT SHOULD BE TREATED AS POSITIVE AND CONTACT USC HAZMAT TEAM FOR ASSISTANCE.
- ROOM 402 APPEARS TO HAVE CARPET OVER WOODEN FLOORING WITH YELLOW AND GREEN GLUE. IF WOOD WILL BE REMOVED AND ANY SUSPECT FLOORING IS DETECTED BELOW, STOP WORK AND CALL USC HAZMAT INSPECTORS TO PERFORM ADDITIONAL TESTING.
- SOIL IN THE CRAWL SPACE OF THE BUILDING IS PRESUMED POSITIVE FOR ASBESTOS, AND POLY SHOULD BE LAID IN THIS SPACE FOR CONTRACTOR ACCESS.
- ASBESTOS 9X9 FLOORING AND BLACK MASTIC HAS BEEN DETECTED UNDER WOOD FLOORING IN THIS BUILDING.
-ALL UNDERGROUND LINES SHALL BE DEEMED POSITIVE UNTIL ANALYTICAL RESULTS CONFIRM OTHERWISE.
- INSPECTORS CHECKED INTERIOR OF MANY OF THE FAN COIL UNITS IN THE BUILDING AS WELL AS MECHANICAL ROOM 111 AND THE CENTRAL CHASE AND IT APPEARS THAT THE COPPER LINES ARE INSULATED WITH BLACK FOAM INSULATION WITH NO SUSPECT MASTIC.
- OFF WHITE PAINT WAS PREVIOUSLY TESTED ON THE SHEETROCK IN THE BUILDING AND IS NEGATIVE FOR LEAD.
- NO SUSPECT GLAZING OR CAULK WAS OBSERVED ON THE DORMER WINDOW THAT WILL BE REMOVED.

IF YOU ENCOUNTER ANY OTHER MATERIALS IN PLACE AND DEEM THEM SUSPECT FOR ASBESTOS AND/OR LEAD, PLEASE STOP WORK AND CONTACT THE ASBESTOS PROGRAM MANAGER FOR FURTHER TESTING OR ABATEMENT.

PLEASE NOTE THAT THE MATERIAL QUANTITY PROVIDED ON THE FIELD SHEET IS ONLY AN ESTIMATE FOR SAMPLING PURPOSES. THE QUANTITY SHOULD BE FIELD VERIFIED FOR ALL OTHER PURPOSES INCLUDING ABATEMENT.

REFER TO THE SURVEY RESULTS ATTACHED TO THE WORK ORDER FOR DETAILED INFORMATION.

**09-SEP-16 ASBESTOS SUMMARY FOR LIEBER COLLEGE (074) – SEPTEMBER 2016**
ASBESTOS HAS BEEN FOUND IN THIS BUILDING. IF DISTURBED, ASBESTOS MAY BE HARMFUL TO YOUR HEALTH.

PLEASE DO NOT DISTURB THE FOLLOWING MATERIALS IN THIS BUILDING AS THEY HAVE BEEN FOUND TO CONTAIN ASBESTOS.

- SKIM COAT ON PLASTER (ROOM 305)
- FLOOR TILE
- BLACK MASTIC UNDER FLOOR TILE
- RESIDUAL BLACK MASTIC ON FLOORING
- WHITE MASTIC ON PIPE INSULATION

IF A BUILDING MATERIAL IS NOT LISTED, DO NOT ASSUME THAT IT DOES NOT CONTAIN ASBESTOS. IT MAY NOT HAVE BEEN TESTED.

FOR FURTHER INFORMATION, PLEASE CONTACT THE USC HAZMAT PROGRAM.

# University of South Carolina
## Pre Bid Sign In Sheet
### Columbia, South Carolina

**Project Name:** USC Lieber College HVAC Renovations
**Project Number:** H27-Z313
**Pre Bid Date & Time:** October 25, 2017 10:00 AM

| SWMBE? | Name | Company Name | Address | Phone # | Email |
|---|---|---|---|---|---|
| Yes No | Jusquana Brookins | USC | 1300 Pickens Street, Columbia SC 29208 | 803.777.3596 | jbrookin@fmc.sc.edu |
| Yes (No) | JEFF GRIFFIN | W.D. BLACKSTONE MA. INC. | 1841 SHAW RD. COLUMBIA, SC 29204 | 803.25.8221 | JGRIFFIN@WDBLACKSTONE.COM |
| Yes No | ROBERT WOLSE | CAMCE COMPANY ROBERT WOLSE@CAMECOMPANY.C | 307-DOCK WY COL S | 803-513-6089 | ROBERT WOLSE@CAMECOMPANY.C |
| Yes No | Danny Wilds | MDI | 4407 Broad River Rd., Cola. | 731.9834 | danny@mdi9834.com |
| Yes (No) | J.S. TATE | WTS | 1316 Washington St. Columbia, SC 29201 | 803-730-7014 | state@watsontatesavory.com |
| Yes No | TY RUSSELL | USC | 700 Pendleton St. Cola, SC 29208 | 240-2992 | trussel@fmc.sc.edu |
| Yes No | NOLAN WESTBURY | USC | 514 S. MAIN ST COLA. SC 29208 | 777-7237 | NOLAN@SC.EDU |
| Yes No | TIM BEDENBAUGH | JCI | 14 WOODCROSS DR COLA | 429.2025 | timothy.lee.bedenbaugh@jci.com |
| Yes No | JAMES SHERRY | USC | 1520 DEVINE ST | 777-5719 | JSHERRY@MAILBOX.SC.EDU |

****By signing this sheet you agree to receive information electronically.**

# University of South Carolina
## Pre Bid Sign In Sheet
**Columbia, South Carolina**

**Project Name:** USC Lieber College HVAC Renovations
**Project Number:** H27-Z313
**Pre Bid Date & Time:** October 25, 2017 10:00 AM

| SWMBE? | Name | Company Name | Address | Phone # | Email |
|---|---|---|---|---|---|
| Yes No | Joe Land | Land Engr. | Cola., SC 29210 262 Sandhurst Rd | 803 528-1437 | Joe.Land.LEA@sc.rr.com |
| Yes No | JEFF ABRAMS | USC | 1300 PICKENS | 803 239-8074 | JABRAMS@FMC.SC.EDU |
| Yes No | | | | | |
| Yes No | | | | | |
| Yes No | | | | | |
| Yes No | | | | | |
| Yes No | | | | | |
| Yes No | | | | | |
| Yes No | | | | | |

*****By signing this sheet you agree to receive information electronically.*

These drawings are the property of Watson Tate Savory, Inc. and may not be used in whole or in part without written consent of the architects and any infringement is subject to legal action.

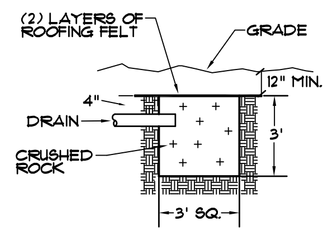


## DRY WELL

NOT TO SCALE

DRYWELL DIGGING NOTES:
- CONTACT PUPS AND COORDINATE LOCATION OF EXISTING UTILITIES
- CONTACT AND COORDINATE WITH USC IN-HOUSE FACILITIES
- CONTACT AND COORDINATE WITH USC UTS
- EXACT LOCATION SHALL BE AS DIRECTED BY USC PROJ. MANAGER

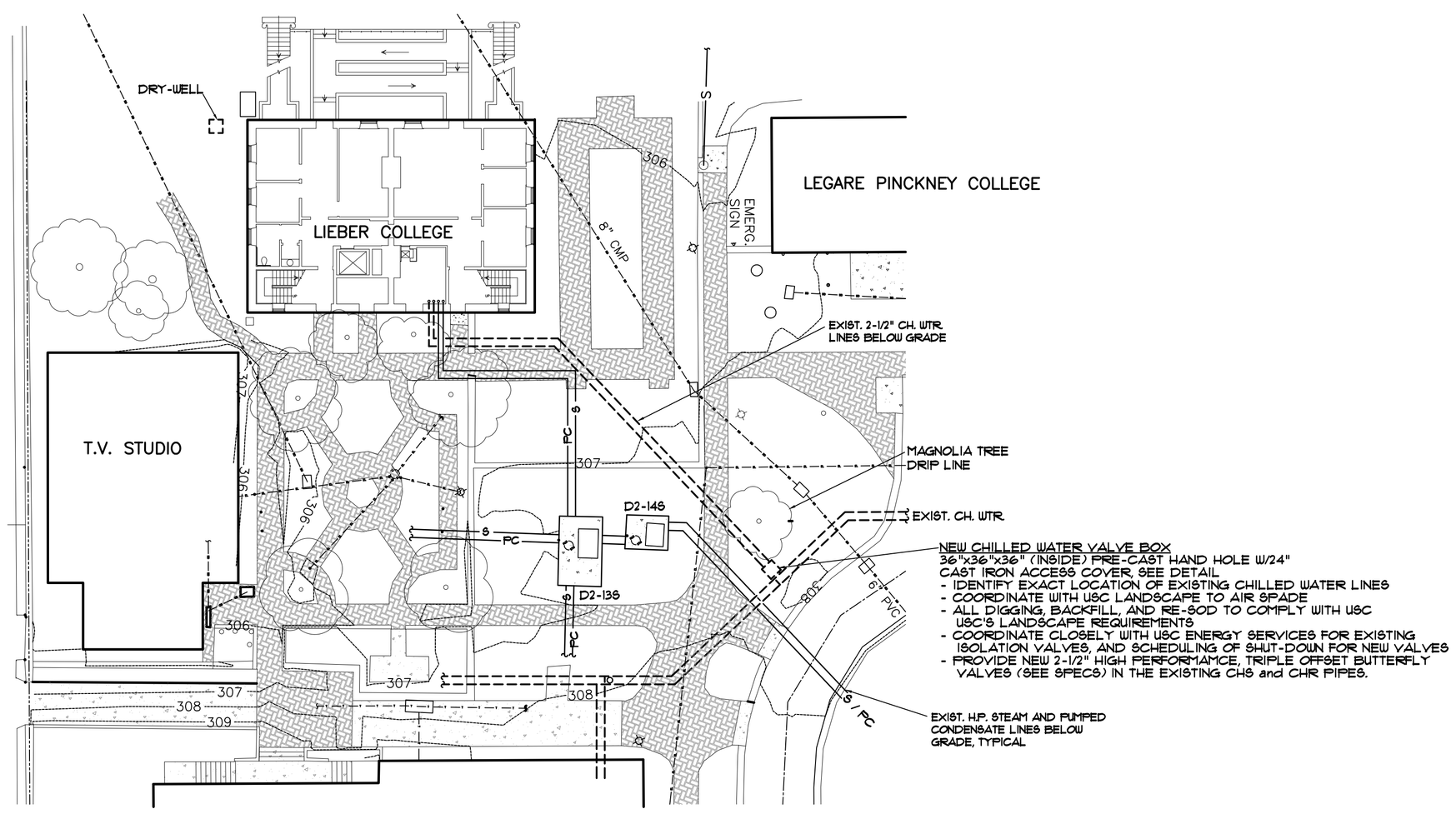


## MECHANICAL SITE PLAN

APPROX. SCALE: 1" = 20'

## NOTES

1. DO NOT SCALE DRAWINGS. VERIFY ALL REQUIRED INFORMATION IN FIELD BY VISITING SITE PRIOR TO SUBMITTING BID.
2. DIMENSIONS ARE IN INCHES UNLESS OTHERWISE NOTED. DUCT SIZES SHOWN ON DRAWINGS ARE INTERIOR DIMENSIONS.
3. WHENEVER THE WORD "PROVIDE" IS USED IT SHALL MEAN FURNISH AND INSTALL COMPLETE AND READY FOR USE.
4. ALL MATERIALS CALLED FOR TO BE REMOVED SHALL REMAIN THE PROPERTY OF THE OWNER. ANY ITEM THE OWNER DOES NOT WISH TO KEEP SHALL BE REMOVED FROM THE SITE OF WORK.
5. PROVIDE ALL ITEMS OF MISCELLANEOUS STEEL AS REQUIRED FOR INSTALLATION OF ALL MECHANICAL ITEMS.
6. PIPING SYSTEMS SHALL BE DRAINED AS REQUIRED FOR INSTALLATION OF WORK.
7. PROVIDE FOR ACCESS TO ALL MECHANICAL ITEMS REQUIRING CLEANING OR ADJUSTMENT.
8. PIPING SHALL BE KEPT CLEAN OF DEBRIS DURING INSTALLATION.
9. PROVIDE GLASSFAB AND MASTIC ON ALL DUCT INSULATION, SEE SPECIFICATIONS. DUCT TAPE WILL NOT BE ACCEPTED.
10. PROVIDE "P" TRAP FOR ALL CONDENSATE DRAINS. PROVIDE INSULATED DRAIN LINES FROM ALL DRAIN CONNECTIONS.
11. INSTALLATION OF EQUIPMENT, DUCTWORK, AND PIPING, INCLUDING VIBRATION ISOLATION SHALL COMPLY WITH 2015 INTERNATIONAL BUILDING CODE FOR SEISMIC PROTECTION. SEE SPECIFICATIONS.

## SYMBOLS

| | |
|---|---|
| | FLEXIBLE DUCT (6 FT. MAX. LENGTH) |
| | EXISTING MATERIALS |
| | NEW MATERIALS |
| | REMOVE MATERIALS |
| | RIGID ROUND RUNOUT DUCT |
| CFM | AIR FLOWRATE, CUBIC FEET PER MINUTE |
| FD | U.L. RATED FIRE DAMPER |
| FSD | U.L. RATED FIRE/SMOKE DAMPER |
| (1) 100 | GRILLE OR DIFFUSER MARK, BALANCING CFM |
| (T) | THERMOSTAT |
| CHS | EXISTING CHILLED WATER SUPPLY |
| CHR | EXISTING CHILLED WATER RETURN |
| HWS | EXISTING HOT WATER SUPPLY |
| HWR | EXISTING HOT WATER RETURN |
| ES | EXISTING LOW PRESSURE STEAM |
| EC | EXISTING STEAM CONDENSATE |
| CHS | NEW CHILLED WATER SUPPLY |
| CHR | NEW CHILLED WATER RETURN |
| HWS | NEW HOT WATER SUPPLY |
| HWR | NEW HOT WATER RETURN |
| | BALL VALVE IN PIPES 2" AND SMALLER<br>BUTTERFLY VALVE IN PIPES 2-1/2" AND LARGER |
| | FLOW CONTROL VALVE |
| | GLOBE VALVE |
| | PIPE TURNING DOWN |
| | CONNECT TO EXISTING |

SOUTH CAROLINA
MECHANICAL DESIGN, INC.
COLUMBIA, SC
No. C00096
CERTIFICATE OF AUTHORIZATION

MECHANICAL DESIGN INC.
4403 Broad River Road
Columbia, S.C. 29210
(803) 731-9834
(803) 731-9837 FAX
CONTACT: Danny Wilds
DATE: 06/16/17
COMM. NO. 163277

ARCHITECTURE
INTERIORS
PLANNING

WTS
WATSON TATE SAVORY

LIEBER COLLEGE HVAC RENOVATION

UNIVERSITY OF SOUTH CAROLINA
COLUMBIA, SC
State Project No: H27-Z313

SOUTH CAROLINA
DANNY WILDS
No. 11155
REGISTERED PROFESSIONAL ENGINEER
6/16/17

Project Number: 1704
Date: 15 JULY 2016

Revisions:

| NO. | ISSUED FOR | DATE |
|---|---|---|
| | | |

Mechanical Site Plan

M-1-S

CONSTRUCTION DOCUMENTS

2/27/2017 10:10:58 AM N:\1610 USC Lieber College HVAC\Revit\1703 & 1704_USC Lieber College HVAC.rvt

These drawings are the property of Watson Tate Savory, Inc. and may not be used in whole or in part without written consent of the architects and any infringement is subject to legal action.

# OUTSIDE AIR / EXHAUST AIR HANDLING UNIT SCHEDULE

PURCHASED BY OWNER, INSTALLED BY CONTRACTOR, SEE SPEC SECTION 23 72 13 OUTDOOR AIR ENERGY RECOVERY UNIT

| MARK | DAIKIN MODEL (1) | SUPPLY FAN (2) | | | EXHAUST FAN (2) | | | ENTHALPY WHEEL, SUMMER | | | | | | | | | DEHUMIDIFICATION COIL (3) | | | | | | | | | ENTHALPY WHEEL, WINTER | | | | | HOT WATER HEAT COIL (3) | | | | | | |
|---|---|---|---|---|---|---|---|---|---|---|---|---|---|---|---|---|---|---|---|---|---|---|---|---|---|---|---|---|---|---|---|---|---|---|---|---|---|
| | | | | | | | | SUPPLY | | | | EXHAUST | | | | TOTAL EFFICIENCY | | | | | | | | | | SUPPLY | | EXHAUST | | TOTAL EFFICIENCY | | | | | | | |
| | | CFM | E.S.P. | FAN * HP | CFM | E.S.P. | FAN * HP | ENT. AIR °FDB | ENT. AIR °FWB | LVG. AIR °FDB | LVG. AIR °FWB | ENT. AIR °FDB | ENT. AIR °FWB | LVG. AIR °FDB | LVG. AIR °FWB | | TOTAL MBH | ENT. AIR °FDB | ENT. AIR °FWB | LVG. AIR °FDB | LVG. AIR °FWB | EWT °F | LWT °F | GPM | WATER P.D. | ENT. AIR °FDB | LVG. AIR °FDB | ENT. AIR °FDB | LVG. AIR °FDB | | MBH | ENT. AIR °FDB | LVG. AIR °FDB | EWT °F | LWT °F | GPM | WATER P.D. |
| OAH-1 | CAH003GDAC | 1,000 | 1.0" | 1.5 | 750 | 1.0" | 1.0 | 95.0 | 78.0 | 81.6 | 69.1 | 72.0 | 60.0 | 90.1 | 74.5 | 78.83% | 48.15 | 81.6 | 69.1 | 54.0 | 53.8 | 48 | 57.3 | 10.3 | 3.0 FT. | 20.0 | 50.9 | 72.0 | 30.4 | 81.09% | 20.8 | 50.9 | 70.0 | 180 | 150 | 1.4 | 1.0 FT. |
| | | | | | | | | | | | | | | | | | | | | | | | | | | | | | | | | | | | | | |

(1) OR EQUAL BY VENMAR, SEMCO OR APPROVED EQUAL. HORIZONTAL UNIT WITH VERTICAL DISCHARGE, FLAT FILTER SECTION W/ 2" MERV 8 PLEATED MEDIA FILTERS, ENTHALPY WHEEL, CHILLED WATER DEHUMIDIFICATION COIL, AND HOT WATER HEAT COIL AND ACCESS SECTIONS. EXHAUST AIR SECTION SHALL BE HORIZONTAL (ON TOP OF O.A. SECTION) WITH HORIZONTAL DISCHARGE. PROVIDE FAN MOUNTS WITH INTERNAL SPRING VIBRATION ISOLATORS.

(2) UNITS TO MATCH AVAILABLE ELECTRICAL SERVICE (208v/3ph). PROVIDE SUPPLY AIR AND EXHAUST AIR FANS WITH VFD/DISCONNECT

(3) MAX. FACE VELOCITY FOR ALL COILS SHALL BE 500 FPM MAX., ALL COILS SHALL HAVE EQUAL FACE AREAS. SERVICE SPACE BETWEEN LEAVING FINS OF UPSTREAM COIL TO THE ENTERING FINS OF THE NEXT DOWNSTREAM COIL SHALL NOT EXCEED 18" ALL COIL SECTIONS SHALL HAVE REMOVABLE ACCESS PANELS.

* MAXIMUM BRAKE H.P. SHALL NOT EXCEED 90% OF FAN H.P. LISTED

# FOUR PIPE FAN COIL UNIT SCHEDULE

PURCHASED BY OWNER, INSTALLED BY CONTRACTOR, SEE SPEC SECTION 23 82 19 FAN COIL UNITS

| MARK | ENVIRO-TEC MODEL (2) | FAN | | | COOLING COIL | | | | | | | | | HEATING COIL | | | | | | | |
|---|---|---|---|---|---|---|---|---|---|---|---|---|---|---|---|---|---|---|---|---|---|
| | | CFM | E.S.P. | WATTS (1) | TOTAL MBH | SENS. MBH | ENT. AIR °F DB | ENT. AIR °F WB | EWT °F | LWT °F | GPM | WATER P.D. | PIPE RUNOUT SIZE | TOTAL MBH | ENT. AIR °F DB | LVG. AIR °F DB | EWT °F | LWT °F | GPM | WATER P.D. | PIPE RUNOUT SIZE |
| **1st FLOOR** | | | | | | | | | | | | | | | | | | | | | |
| FCU-1.1-04 | VFE-C04 | 400 | N/A | 70 | 7.2 | 6.5 | 75 | 63 | 48 | 60 | 1.2 | 6.0 | 3/4" | 16.5 | 60 | 98 | 180 | 150 | 1.1 | 6.0 | 1/2" |
| FCU-1.2-03 | VFE-C03 | 300 | N/A | 60 | 4.6 | 4.4 | 75 | 63 | 48 | 60 | 0.8 | 6.0 | 3/4" | 11.7 | 60 | 97 | 180 | 150 | 0.8 | 6.0 | 1/2" |
| FCU-1.3-04 | VFE-C04 | 400 | N/A | 70 | 7.2 | 6.5 | 75 | 63 | 48 | 60 | 1.2 | 6.0 | 3/4" | 16.5 | 60 | 98 | 180 | 150 | 1.1 | 6.0 | 1/2" |
| FCU-1.4-08 | VFE-C08 | 560 | N/A | 115 | 8.8 | 8.4 | 75 | 63 | 48 | 60 | 1.5 | 6.0 | 3/4" | 23.9 | 60 | 99 | 180 | 150 | 1.60 | 6.0 | 3/4" |
| FCU-1.5-04 | VFE-C04 | 400 | N/A | 70 | 7.2 | 6.5 | 75 | 63 | 48 | 60 | 1.2 | 6.0 | 3/4" | 16.5 | 60 | 98 | 180 | 150 | 1.1 | 6.0 | 1/2" |
| FCU-1.6-03 | VFE-C03 | 300 | N/A | 60 | 4.6 | 4.4 | 75 | 63 | 48 | 60 | 0.8 | 6.0 | 3/4" | 11.7 | 60 | 97 | 180 | 150 | 0.8 | 6.0 | 1/2" |
| FCU-1.7-04 | VFE-C04 | 400 | N/A | 70 | 7.2 | 6.5 | 75 | 63 | 48 | 60 | 1.2 | 6.0 | 3/4" | 16.5 | 60 | 98 | 180 | 150 | 1.1 | 6.0 | 1/2" |
| FCU-1.8-04 | VFE-C04 | 400 | N/A | 70 | 7.2 | 6.5 | 75 | 63 | 48 | 60 | 1.2 | 6.0 | 3/4" | 16.5 | 60 | 98 | 180 | 150 | 1.1 | 6.0 | 1/2" |
| FCU-1.9--03 | VFE-C03 | 300 | N/A | 60 | 4.6 | 4.4 | 75 | 63 | 48 | 60 | 0.8 | 6.0 | 3/4" | 11.7 | 60 | 97 | 180 | 150 | 0.8 | 6.0 | 1/2" |
| FCU-1.10-02 | VFE-C02 | 220 | N/A | 45 | 2.9 | 2.8 | 75 | 63 | 48 | 60 | 0.5 | 6.0 | 3/4" | 8.7 | 60 | 97 | 180 | 150 | 0.6 | 6.0 | 1/2" |
| **2nd FLOOR** | | | | | | | | | | | | | | | | | | | | | |
| FCU-2.1-10 | VFE-C010 | 745 | N/A | 135 | 13.1 | 11.9 | 75 | 63 | 48 | 60 | 2.2 | 6.0 | 3/4" | 31.9 | 60 | 99 | 180 | 150 | 2.20 | 6.0 | 3/4" |
| FCU-2.2-04 | VFE-C04 | 400 | N/A | 70 | 7.2 | 6.5 | 75 | 63 | 48 | 60 | 1.2 | 6.0 | 3/4" | 16.5 | 60 | 98 | 180 | 150 | 1.1 | 6.0 | 1/2" |
| FCU-2.3-40 | HLP-40 | 510 | 0.25" | 125 | 12.6 | 10.7 | 75 | 63 | 48 | 60 | 2.2 | 6.0 | 3/4" | 25.5 | 60 | 106 | 180 | 150 | 1.7 | 6.0 | 3/4" |
| FCU-2.4-03 | VFE-C03 | 300 | N/A | 60 | 4.6 | 4.4 | 75 | 63 | 48 | 60 | 0.8 | 6.0 | 3/4" | 11.7 | 60 | 97 | 180 | 150 | 0.8 | 6.0 | 1/2" |
| FCU-2.5-03 | VFE-C03 | 300 | N/A | 60 | 4.6 | 4.4 | 75 | 63 | 48 | 60 | 0.8 | 6.0 | 3/4" | 11.7 | 60 | 97 | 180 | 150 | 0.8 | 6.0 | 1/2" |
| FCU-2.6-04 | VFE-C04 | 400 | N/A | 70 | 7.2 | 6.5 | 75 | 63 | 48 | 60 | 1.2 | 6.0 | 3/4" | 16.5 | 60 | 98 | 180 | 150 | 1.1 | 6.0 | 1/2" |
| FCU-2.7-50 | HLP-50 | 640 | 0.25" | 185 | 14.4 | 12.7 | 75 | 63 | 48 | 60 | 2.5 | 6.0 | 3/4" | 32.1 | 60 | 105 | 180 | 150 | 2.2 | 6.0 | 3/4" |
| FCU-2.8-50 | HLP-50 | 640 | 0.25" | 185 | 14.4 | 12.7 | 75 | 63 | 48 | 60 | 2.5 | 6.0 | 3/4" | 32.1 | 60 | 105 | 180 | 150 | 2.2 | 6.0 | 3/4" |
| FCU-2.9-04 | VFE-C04 | 400 | N/A | 70 | 7.2 | 6.5 | 75 | 63 | 48 | 60 | 1.2 | 6.0 | 3/4" | 16.5 | 60 | 98 | 180 | 150 | 1.1 | 6.0 | 1/2" |
| **3rd FLOOR** | | | | | | | | | | | | | | | | | | | | | |
| FCU-3.1-04 | VFE-C04 | 400 | N/A | 70 | 7.2 | 6.5 | 75 | 63 | 48 | 60 | 1.2 | 6.0 | 3/4" | 16.5 | 60 | 98 | 180 | 150 | 1.1 | 6.0 | 1/2" |
| FCU-3.2-03 | VFE-C03 | 300 | N/A | 60 | 4.6 | 4.4 | 75 | 63 | 48 | 60 | 0.8 | 6.0 | 3/4" | 11.7 | 60 | 97 | 180 | 150 | 0.8 | 6.0 | 1/2" |
| FCU-3.3-03 | VFE-C03 | 300 | N/A | 60 | 4.6 | 4.4 | 75 | 63 | 48 | 60 | 0.8 | 6.0 | 3/4" | 11.7 | 60 | 97 | 180 | 150 | 0.8 | 6.0 | 1/2" |
| FCU-3.4-03 | VFE-C03 | 300 | N/A | 60 | 4.6 | 4.4 | 75 | 63 | 48 | 60 | 0.8 | 6.0 | 3/4" | 11.7 | 60 | 97 | 180 | 150 | 0.8 | 6.0 | 1/2" |
| FCU-3.5-03 | VFE-C03 | 300 | N/A | 60 | 4.6 | 4.4 | 75 | 63 | 48 | 60 | 0.8 | 6.0 | 3/4" | 11.7 | 60 | 97 | 180 | 150 | 0.8 | 6.0 | 1/2" |
| FCU-3.6-06 | VFE-C06 | 515 | N/A | 80 | 8.0 | 7.7 | 75 | 63 | 48 | 60 | 1.4 | 6.0 | 3/4" | 22.1 | 60 | 99 | 180 | 150 | 1.50 | 6.0 | 3/4" |
| FCU-3.7-04 | VFE-C04 | 400 | N/A | 70 | 7.2 | 6.5 | 75 | 63 | 48 | 60 | 1.2 | 6.0 | 3/4" | 16.5 | 60 | 98 | 180 | 150 | 1.1 | 6.0 | 1/2" |
| FCU-3.8-04 | VFE-C04 | 400 | N/A | 70 | 7.2 | 6.5 | 75 | 63 | 48 | 60 | 1.2 | 6.0 | 3/4" | 16.5 | 60 | 98 | 180 | 150 | 1.1 | 6.0 | 1/2" |
| FCU-3.9-04 | VFE-C04 | 400 | N/A | 70 | 7.2 | 6.5 | 75 | 63 | 48 | 60 | 1.2 | 6.0 | 3/4" | 16.5 | 60 | 98 | 180 | 150 | 1.1 | 6.0 | 1/2" |
| FCU-3.10-50 | HLP-50 | 640 | 0.25" | 185 | 14.4 | 12.7 | 75 | 63 | 48 | 60 | 2.5 | 6.0 | 3/4" | 32.1 | 60 | 105 | 180 | 150 | 2.2 | 6.0 | 3/4" |
| FCU-3.11-40 | HLP-40 | 510 | 0.25" | 125 | 12.6 | 10.7 | 75 | 63 | 48 | 60 | 2.2 | 6.0 | 3/4" | 25.5 | 60 | 106 | 180 | 150 | 1.7 | 6.0 | 3/4" |
| **4th FLOOR** | | | | | | | | | | | | | | | | | | | | | |
| FCU-4.1-04 | VFE-C04 | 400 | N/A | 70 | 7.2 | 6.5 | 75 | 63 | 48 | 60 | 1.2 | 6.0 | 3/4" | 16.5 | 60 | 98 | 180 | 150 | 1.1 | 6.0 | 1/2" |
| FCU-4.2-10 | VFE-C010 | 745 | N/A | 135 | 13.1 | 11.9 | 75 | 63 | 48 | 60 | 2.2 | 6.0 | 3/4" | 31.9 | 60 | 99 | 180 | 150 | 2.20 | 6.0 | 3/4" |
| FCU-4.3-04 | VFE-C04 | 400 | N/A | 70 | 7.2 | 6.5 | 75 | 63 | 48 | 60 | 1.2 | 6.0 | 3/4" | 16.5 | 60 | 98 | 180 | 150 | 1.1 | 6.0 | 1/2" |
| FCU-4.4-06 | VFE-C06 | 515 | N/A | 80 | 8.0 | 7.7 | 75 | 63 | 48 | 60 | 1.4 | 6.0 | 3/4" | 22.1 | 60 | 99 | 180 | 150 | 1.50 | 6.0 | 3/4" |
| FCU-4.5-06 | VFE-C06 | 515 | N/A | 80 | 8.0 | 7.7 | 75 | 63 | 48 | 60 | 1.4 | 6.0 | 3/4" | 22.1 | 60 | 99 | 180 | 150 | 1.50 | 6.0 | 3/4" |

(1) FAN COIL UNIT TO MATCH AVAILABLE ELECTRICAL SERVICE (120V/1PH). PROVIDE WITH ETI BC-06 CONTROL BOARD WITH TRANSFORMER AND 3-SPEED SOLID STATE RELAYS. PROVIDE JOHNSON CONTROLS INC. DIGITAL FIELD EQUIPMENT CONTROLLER (FEC) FACTORY INSTALLED AND WIRED. PROVIDE WITH DISCONNECT SWITCH (120V/1PH).

(2) OR EQUAL BY TRANE, RITTLING, OR APPROVED EQUAL.

(3) CONTRACTOR SHALL ENSURE ANY FAN COIL UNIT SUBSTITUTED FOR THOSE SPECIFIED SHALL BE COORDINATED WITH ELECTRICAL AND PHYSICAL DIFFERENCES.

(4) FLOOR MOUNTED EXPOSED UNITS SHALL INCLUDE 18 GA. REMOVABLE FRONT PANELS, EXTENDED POCKETS, SUB-BASE, FALSE BACK FOR ELECTRICAL, 304 STAINLESS STEEL DRAIN PANS, 3-ROW CHILLED WATER COOLING COIL, 1-ROW HOT WATER HEATING COIL (RE-HEAT), REMOVABLE RETURN GRILLE, LINEAR BAR SUPPLY GRILLE, COILS SHALL HAVE 1/2" COPPER TUBES WITH 0.025" WALL THICKNESS, COILS SHALL HAVE AIR VENT AND DRAIN CONNECTIONS, OVERSIZED AUXILIARY DRIP TRAY UNDER CHILLED WATER CONTROL VALVES, MERV 8 PLEATED MEDIA FILTERS, AND FACTORY MOUNTED FLOAT SWITCHES IN THE DRAIN PANS. ALL COILS SHALL HAVE THREADED CONNECTIONS. CHILLED WATER CONTROL VALVES SHALL BE 2-WAY, PRESSURE INDEPENDENT CONTROL VALVES. ALL CONTACTORS (SWITCHES) SHALL BE TOTALLY SILENT.

# PUMP SCHEDULE

| MARK | B & G (2) MODEL | GPM | HEAD | RPM | MIN. EFFICIENCY | MAX B.H.P. | MOTOR H.P. | SERVICE |
|---|---|---|---|---|---|---|---|---|
| P-1 (3) | SERIES 60 | 570 (4) | 50 FT. | 1750 | 54% | 1.5 | 2.0 (1) | PRIMARY CHILLED WATER |
| P-2 (3) | SERIES 60 | 570 (4) | 50 FT. | 1750 | 54% | 1.5 | 2.0 (1) | STAND-BY CHILLED WATER |
| P-3 (3) | SERIES 60 | 480 (4) | 45 FT. | 1750 | 52% | 1.5 | 2.0 (1) | PRIMARY HOT WATER |
| P-4 (3) | SERIES 60 | 480 (4) | 45 FT. | 1750 | 52% | 1.5 | 2.0 (1) | STAND-BY HOT WATER |
| | | | | | | | | |

(1) PUMP TO MATCH AVAILABLE ELECTRICAL SERVICE, SEE ELECTRICAL

(2) OR EQUAL BY TACO, PATTERSON, ARMSTRONG OR APPROVED EQUAL, SEE SPECIFICATIONS

(3) PROVIDE WITH VARIABLE SPEED DRIVE, SEE SPECIFICATIONS.

# GRILLE AND DIFFUSER SCHEDULE

| MARK | SERVICE | NECK SIZE | MAX CFM | RUNOUT SIZE | REMARKS |
|---|---|---|---|---|---|
| (1) | SUPPLY | 6"ϕ | 110 | 6"ϕ | W/ BUTTERFLY DPR. |
| (2) | SUPPLY | 8"ϕ | 230 | 8"ϕ | W/ BUTTERFLY DPR. |
| (3) | SUPPLY | 10"ϕ | 375 | 10"ϕ | W/ BUTTERFLY DPR. |
| (8) | EXHAUST | 8"x8" | 250 | 8"x8" | W/ OPP. BL. DPR. |
| (FR) | RETURN | 22"x22" | 1,800 | 22"x14" | HINGED FILTER RETURN GRILLE |
| | | | | | |

| GRILLE/ DIFFUSER | CEILING TYPE | PRICE * MODEL NO. | MATERIAL |
|---|---|---|---|
| SQUARE SUPPLY | LAY-IN | SPD-31 (PLAQUE) | POWDER COATED STEEL |
| SQUARE SUPPLY | GYP. BD. | SPD-31 (PLAQUE) | POWDER COATED STEEL |
| SQUARE EXHAUST | LAY-IN | 81-TB (EGGCRATE 1/2"x1/2"x1") | ALUMINUM (NOTE 4) |
| SQUARE EXHAUST | GYP. BD. | 81-F-A (EGGCRATE 1/2"x1/2"x1") | ALUMINUM (NOTE 4) |
| HSD | GYP. BD. | LBMR (REVERSIBLE CORE) W/ OBD | ALUMINUM |
| FILTER RET. GR. | LAY-IN | 80FF (EGG CRATE FILTER RETURN) (1/2"x1/2"x1/2" CORE) W/ HINGE-TAB | ALUMINUM |
| | | | |

* OR EQUAL BY METALAIRE, NAILOR, KREUGER, TITUS OR APPROVED EQUAL.

NOTES:
1. GRILLE AND DIFFUSER LOCATIONS SHOWN ON FLOOR PLANS ARE APPROXIMATE, SEE ARCHITECTURAL REFLECTED CEILING PLAN FOR EXACT LOCATION.
2. GRILLES AND DIFFUSERS SHALL MATCH CEILING TYPE, SEE ARCHITECTURAL DRAWINGS FOR CEILING TYPE.
3. GRILLE AND DIFFUSER COLORS SHALL BE SELECTED BY ARCHITECT, SUBMIT COLOR SAMPLES TO ARCHITECT.
4. LAY-IN EGGCRATE SHALL HAVE FULL FACE (24x24) AND FULL SIZE STEEL BACK PLATE WITH DUCT CONNECTOR COLLAR. INTERIOR OF GRILLE SHALL BE FLAT BLACK.

SOUTH CAROLINA MECHANICAL DESIGN, INC. COLUMBIA, SC No. C00096 CERTIFICATE OF AUTHORIZATION

MECHANICAL DESIGN INC.
4403 Broad River Road
Columbia, S.C. 29210
(803) 731-9834
(803) 731-9837 FAX
CONTACT: Danny Wilds
DATE: 06/16/17 COMM. NO. 163277

ARCHITECTURE
INTERIORS
PLANNING

WTS
WATSON TATE SAVORY

LIEBER COLLEGE HVAC RENOVATION
UNIVERSITY OF SOUTH CAROLINA
COLUMBIA, SC
State Project No: H27-Z313

SOUTH CAROLINA PROFESSIONAL ENGINEER No. 11155 6/16/17 DANNY WILDS

Project Number: 1704
Date: 15 JULY 2016

Revisions:

| NO. | ISSUED FOR | DATE |
|---|---|---|
| | | |

HVAC Schedules

M-001

CONSTRUCTION DOCUMENTS

These drawings are the property of Watson Tate Savory, Inc. and may not be used in whole or in part without written consent of the architects and any infringement is subject to legal action.

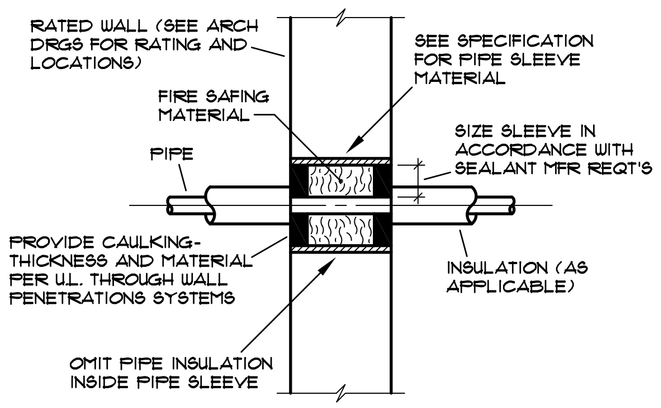


## PIPE THRU FIRE RATED ASSEMBLY DETAIL

NO SCALE

NOTE:
CONTRACTOR SHALL SUBMIT DETAILED SHOP DRAWINGS/DATA SHEETS FOR U.L. RATED PIPE PENETRATIONS FOR REVIEW. FAILURE TO COMPLY PRIOR TO INSTALLATION OF CAULKING MATERIALS SHALL REQUIRE THE REMOVAL AND REPLACEMENT OF MATERIALS WITH SPECIFIED PRODUCTS.

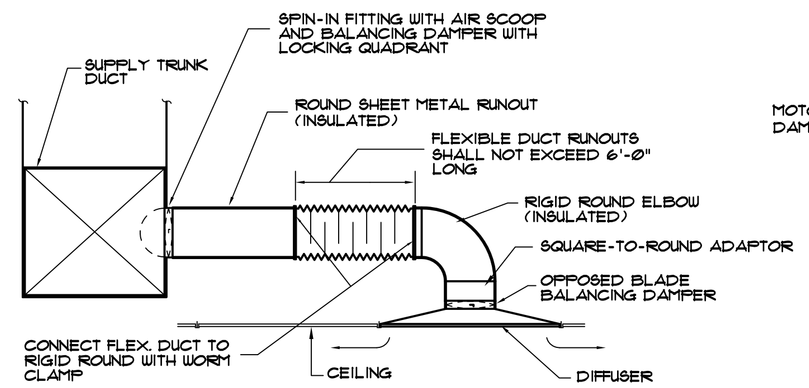


## CEILING DIFFUSER INSTALLATION - PLAQUE

NOT TO SCALE

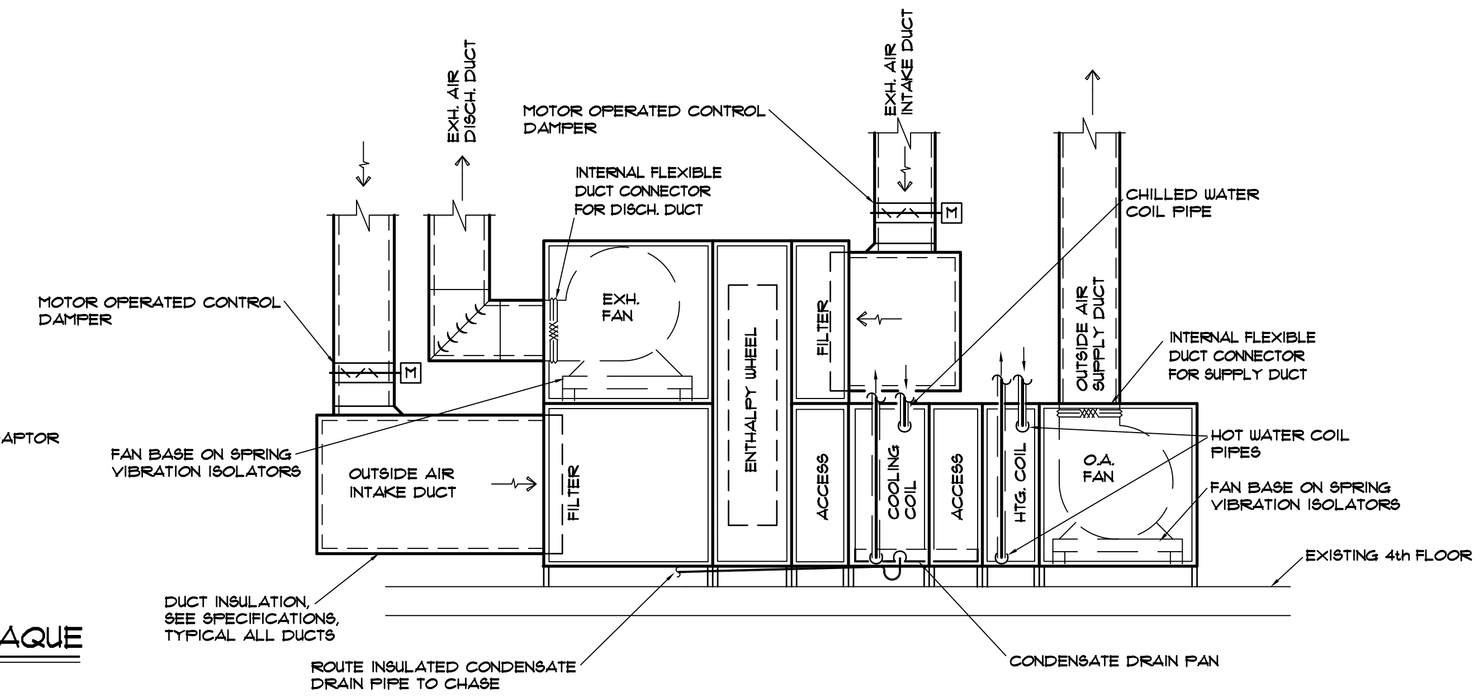


## OUTSIDE AIR HANDLING UNIT DETAIL

NOT TO SCALE

ACCESS DOORS:

BOTTOM DECK:
FAN SECTION - 16"x22"
ACCESS SECTIONS - 12"x22"
ENTHALPY WHEEL - 12"x48"
FILTER SECTION - 10"x22"

TOP DECK:
FAN SECTION - 16"x22"
FILTER SECTION - 10"x22"

NOTE:
BOLT AHU TO EXISTING FLOOR IN COMPLIANCE WITH THE SEISMIC REQUIREMENTS OF THE 2015 INTERNATIONAL BUILDING CODE

NOTE:
HOT WATER COIL AND CHILLED WATER COIL SHALL INCLUDE VENT AND DRAIN CONNECTIONS

FAN SHALL HAVE EXTENDED LUBE LINES TO A BRACKET JUST INSIDE FAN MODULE DOORS

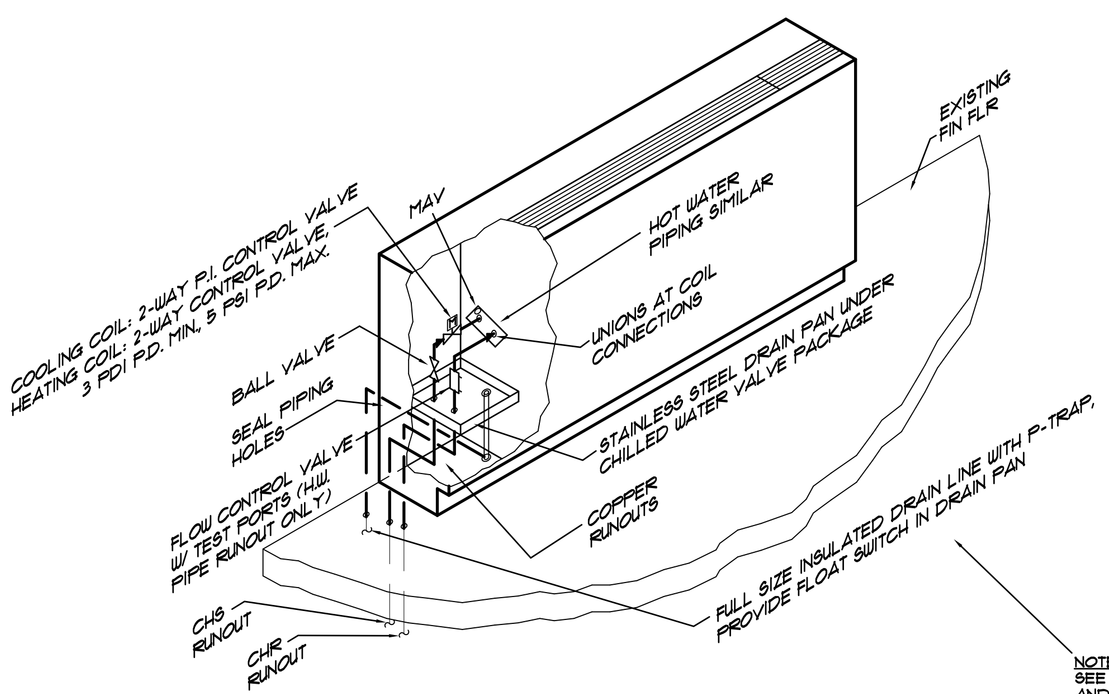


## ROOM FAN COIL UNIT (VERTICAL) DETAIL

NO SCALE

NOTE:
SEE FAN COIL UNIT SCHEDULE AND SPECIFICATIONS FOR UNIT ACCESSORIES

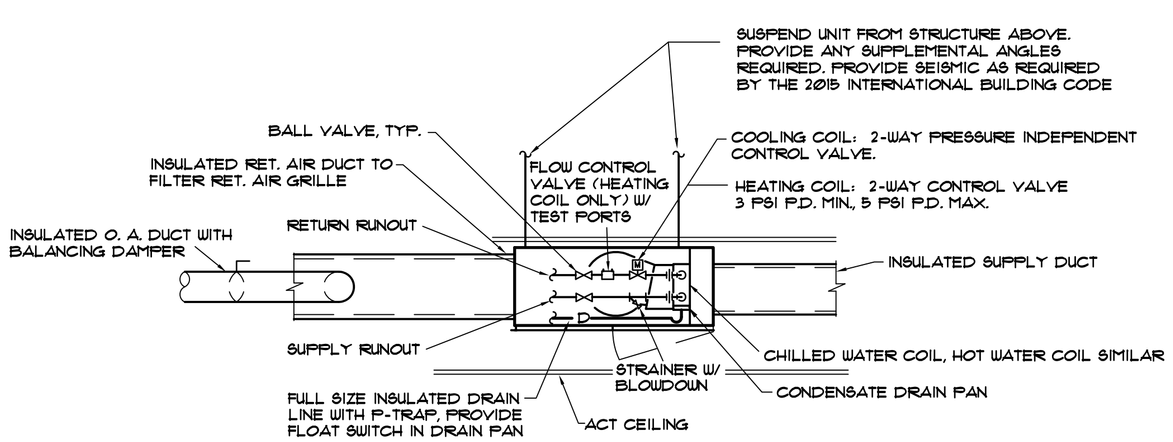


## FAN COIL UNIT (HORIZONTAL) DETAIL

NOT TO SCALE

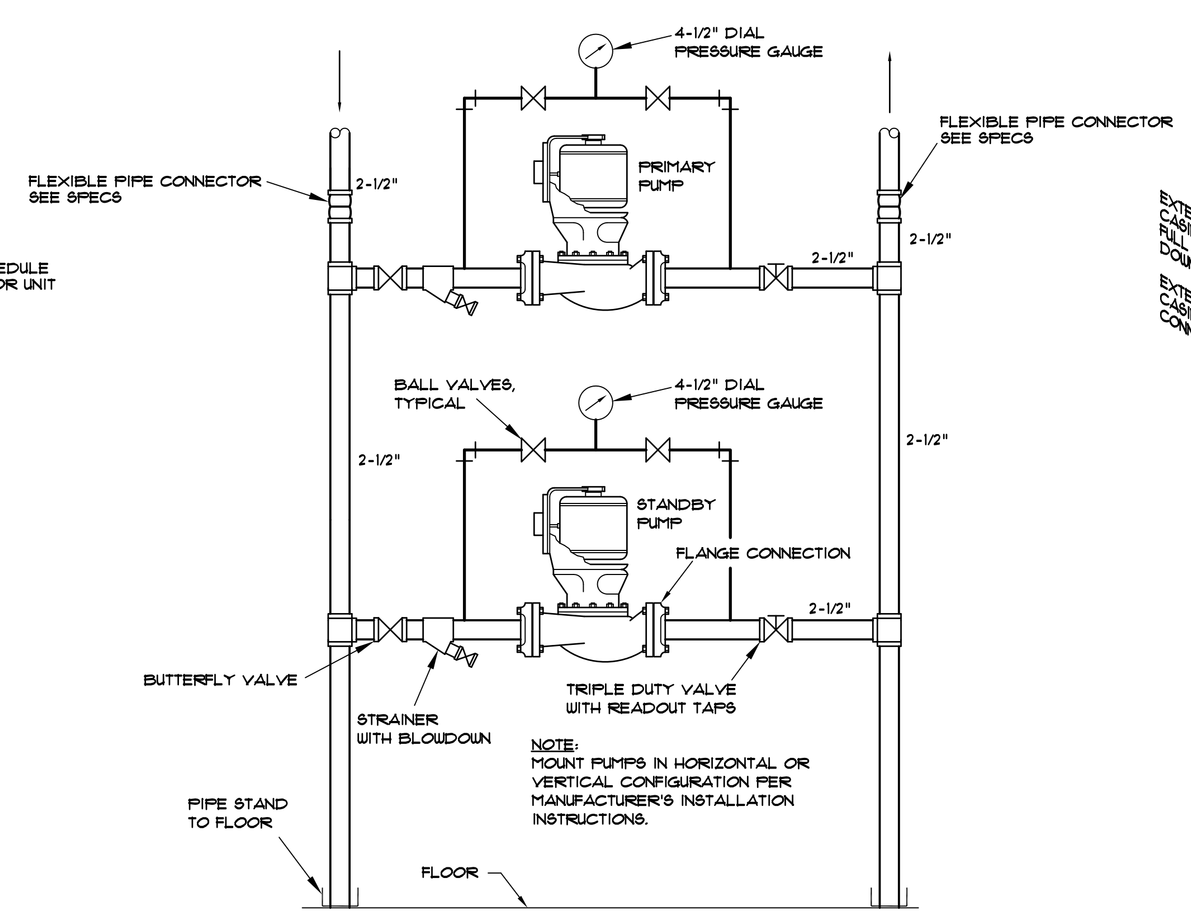


NOTE:
MOUNT PUMPS IN HORIZONTAL OR VERTICAL CONFIGURATION PER MANUFACTURER'S INSTALLATION INSTRUCTIONS.

## PUMP DETAIL

NOT TO SCALE

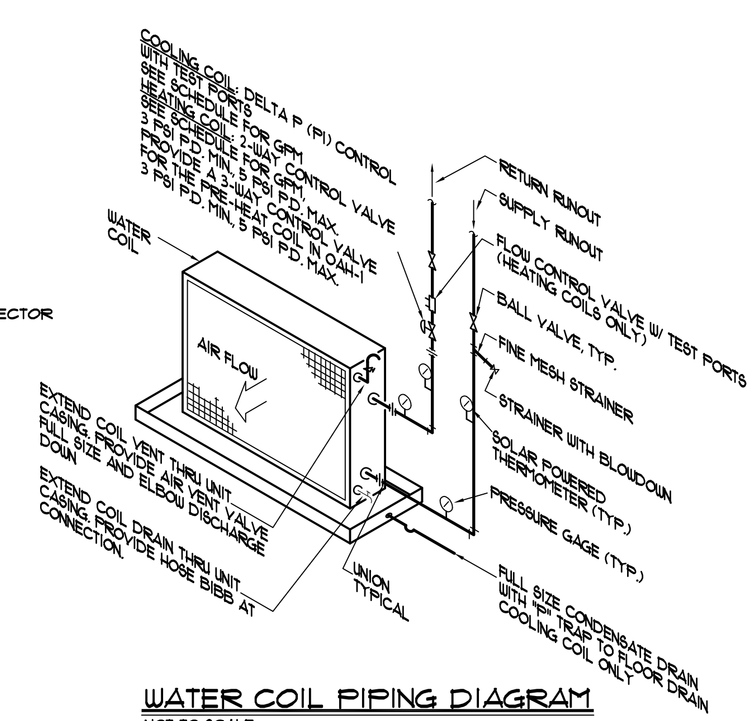


## WATER COIL PIPING DIAGRAM

NOT TO SCALE

SOUTH CAROLINA
MECHANICAL DESIGN, INC.
COLUMBIA, SC
No. C00096
CERTIFICATE OF AUTHORIZATION

MECHANICAL DESIGN INC.
4403 Broad River Road
Columbia, S.C. 29210
(803) 731-9834
(803) 731-9837 FAX
CONTACT: Danny Wilds
DATE: 06/16/17
COMM. NO. 163277

ARCHITECTURE
INTERIORS
PLANNING

WTS
WATSON TATE SAVORY

LIEBER COLLEGE HVAC RENOVATION
UNIVERSITY OF SOUTH CAROLINA
COLUMBIA, SC
State Project No: H27-Z313

SOUTH CAROLINA ENGINEER No. 11155 6/16/17 DANNY WILDS

Project Number: 1704
Date: 15 JULY 2016

Revisions:

| NO. | ISSUED FOR | DATE |
|---|---|---|

HVAC Details

M-002

CONSTRUCTION DOCUMENTS

These drawings are the property of Watson Tate Savory, Inc. and may not be used in whole or in part without written consent of the architects and any infringement is subject to legal action.

## HAND HOLE RING NOTES

1. RING AND COVER SHALL BE KEYED FOR ALIGNMENT.
2. SECURE TOP WITH 6 3/4"x REQUIRED LENGTH BRASS MACHINE BOLTS.
3. MINIMUM WEIGHT 775 POUNDS, RING & COVER.
4. EAST JORDAN IRON WORKS CAT. #1825.
5. ACCESS COVER ELEVATION SHALL BE ADJUSTABLE.

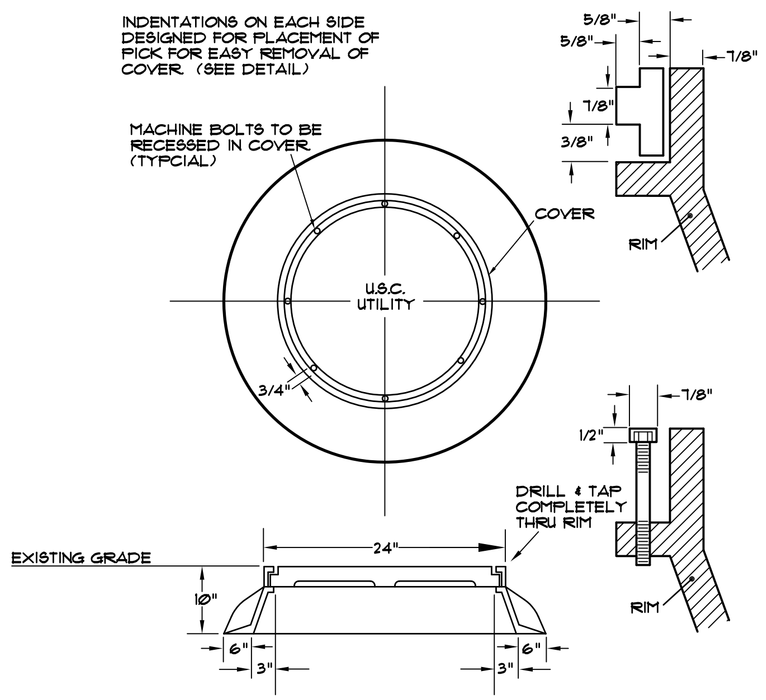


## HAND HOLE RING & COVER

NOT TO SCALE

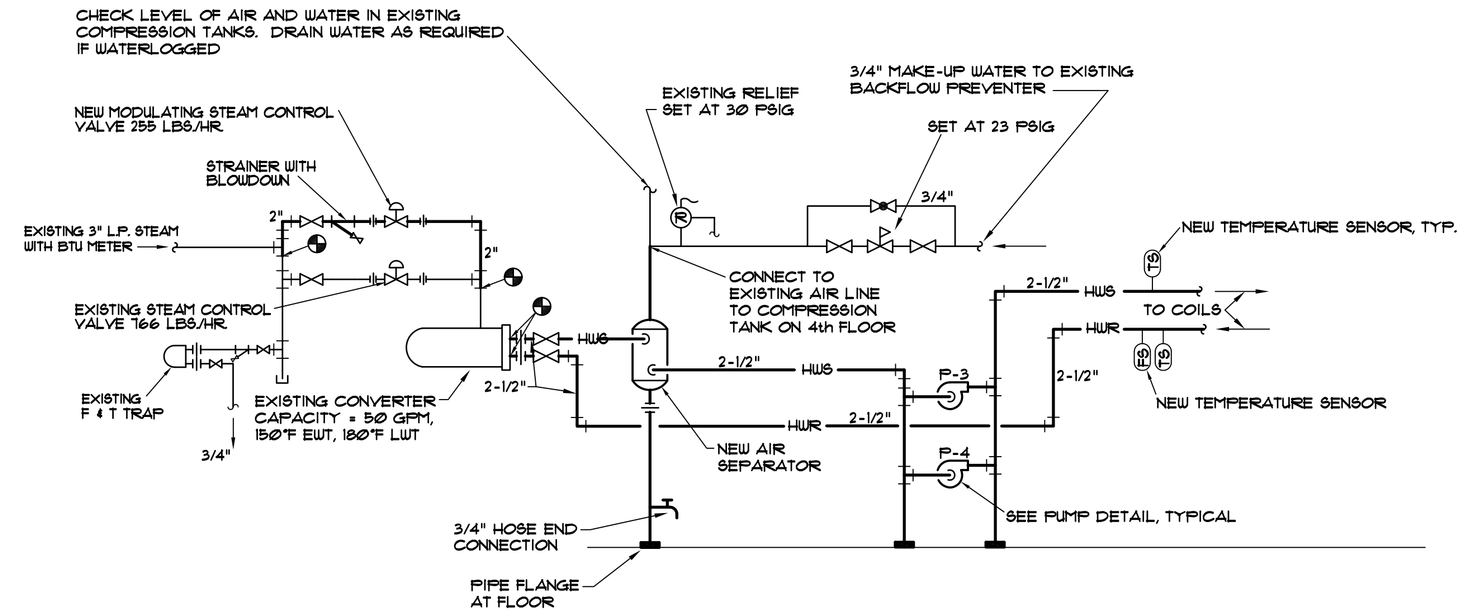


## HOT WATER PIPING SCHEMATIC

NO SCALE

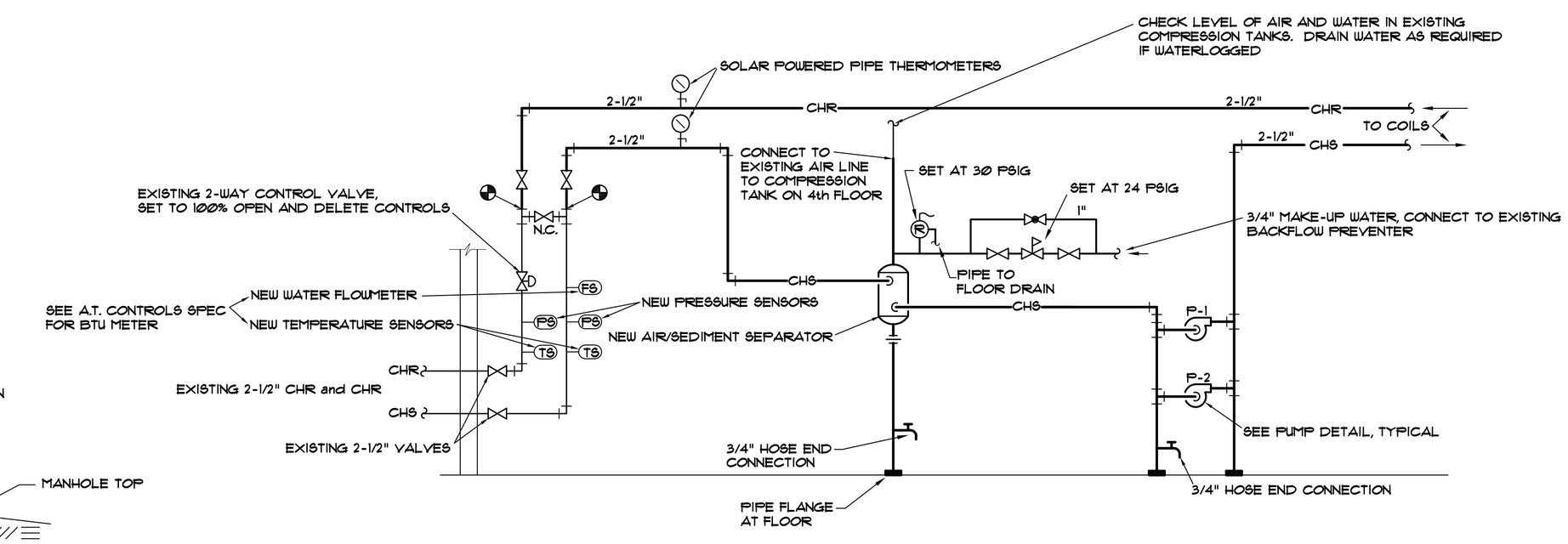


## CHILLED WATER PIPING SCHEMATIC

NO SCALE

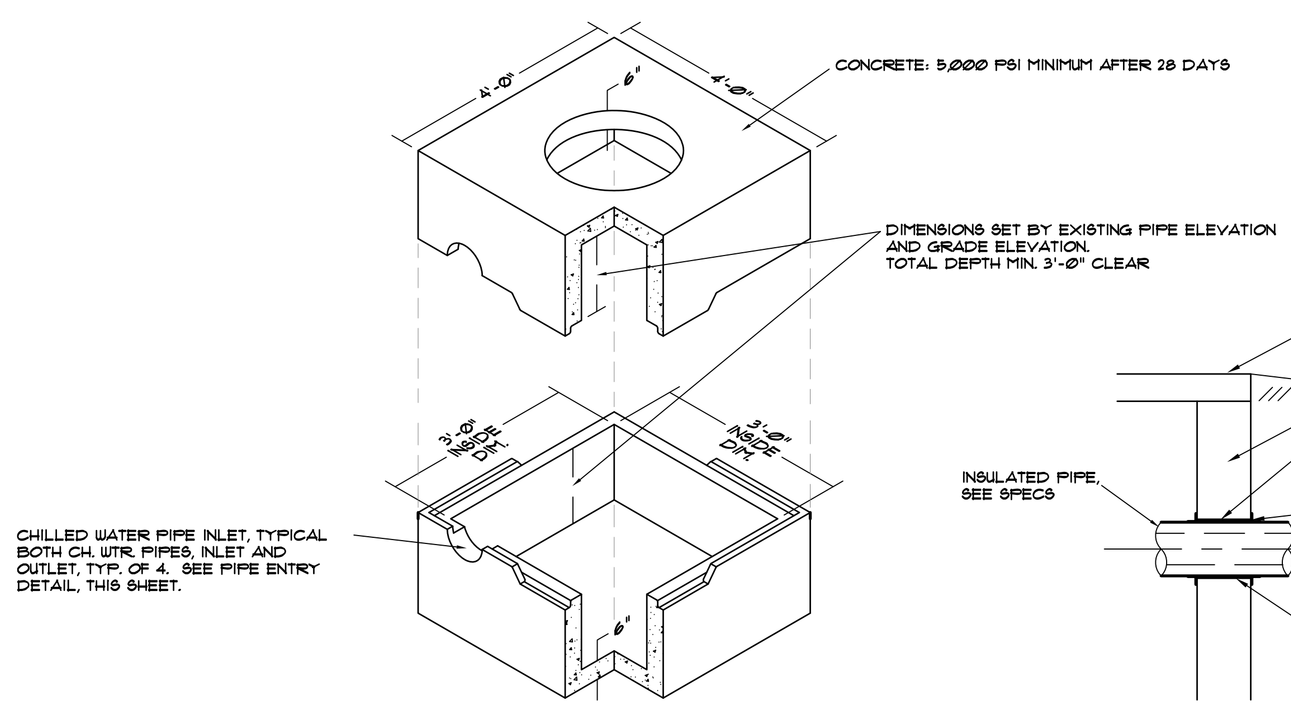


## CHILLED WATER VALVE HAND HOLE DETAIL

NOT TO SCALE

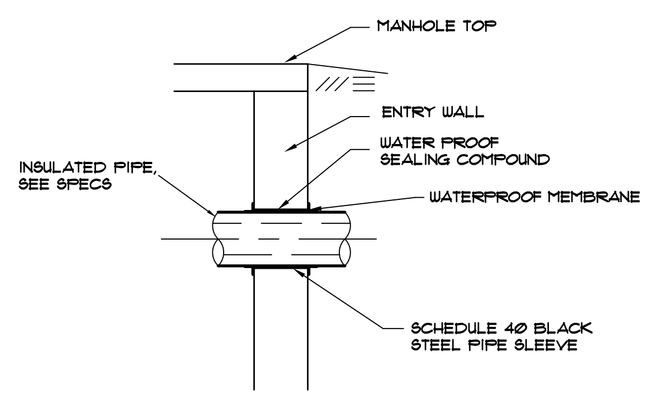


## PIPE ENTRY DETAIL

NOT TO SCALE

SOUTH CAROLINA
MECHANICAL DESIGN, INC.
COLUMBIA, SC
No. C00096
CERTIFICATE OF AUTHORIZATION

MECHANICAL DESIGN INC.
4403 Broad River Road
Columbia, S.C. 29210
(803) 731-9834
(803) 731-9837 FAX
CONTACT: Danny Wilds
DATE: 06/16/17
COMM. NO. 163277

ARCHITECTURE
INTERIORS
PLANNING

WTS
WATSON TATE SAVORY

LIEBER COLLEGE HVAC RENOVATION

UNIVERSITY OF SOUTH CAROLINA
COLUMBIA, SC
State Project No: H27-Z313

SOUTH CAROLINA
REGISTERED PROFESSIONAL ENGINEER
No. 11155
6/16/17
DANNY WILDS

Project Number: 1704
Date: 15 JULY 2016

Revisions:

| NO. | ISSUED FOR | DATE |
|---|---|---|
| | | |

HVAC Details

M-003

CONSTRUCTION DOCUMENTS

2/27/2017 10:10:38 AM N:\1610 USC Lieber College HVAC\Revit\1703 & 1704_USC Lieber College HVAC.rvt

These drawings are the property of Watson Tate Savory, Inc. and may not be used in whole or in part without written consent of the architects and any infringement is subject to legal action.

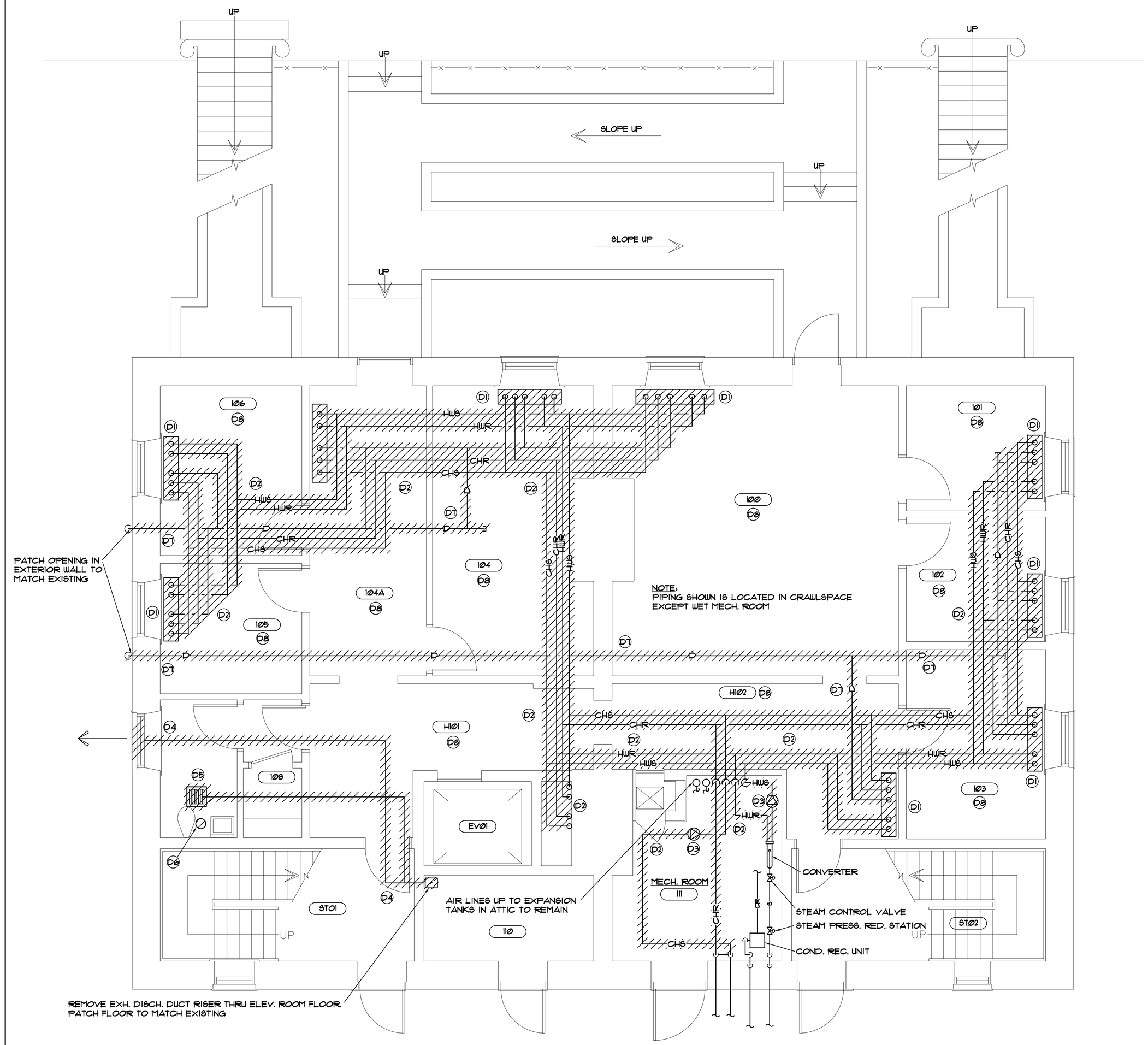


## FIRST FLOOR HVAC DEMOLITION PLAN

SCALE: 1/4" = 1'-0"

## DEMOLITION NOTES

D1 REMOVE FAN COIL UNIT SHOWN AS HATCHED COMPLETE INCLUDING ASSOCIATED HOT AND CHILLED WATER PIPE RUNOUTS, POWER (SEE ELECTRICAL), CONTROLS, AND SUPPORTS. PATCH HOLES IN FLOOR. REPAIR WALLS AND FLOORS, SEE ARCHITECTURAL.

D2 REMOVE HOT AND CHILLED WATER PIPING SHOWN HATCHED COMPLETE INCLUDING HANGERS AND SUPPORTS.

D3 REMOVE HOT AND CHILLED WATER PUMPS COMPLETE INCLUDING POWER WIRING, CONTROLS, AND SUPPORTS. (TYP. OF 4 PUMPS).

D4 REMOVE EXH. DUCT FROM LOUVER COMPLETE INCLUDING HANGERS AND SUPPORTS. REMOVE LOUVER AND REPLACE AS NOTED ON RENOVATION PLAN AND SPECIFICATIONS.

D5 REMOVE EXH. FAN COMPLETE COMPLETE INCLUDING POWER, CONTROLS, AND HANGERS. REMOVE EXH. DUCT INDICATED BY HATCHING.

D6 REMOVE CEILING MOUNTED HEAT LAMP COMPLETE INCLUDING WALL MOUNTED TIMER SWITCH. REPLACE CEILING TILE.

D7 REMOVE CCONDENSATE DRAIN LINES COMPLETE INCLUDING HANGERS AND SUPPORTS

D8 REMOVE ACOUSTICAL TILE CEILINGS COMPLETE INCLUDING HANGERS, GRID, AND WALL MOLD. COORDINATE WITH ELECTRICAL SUB FOR MISC. INTERIOR RENOVATIONS PROJECT FOR HANDLING OF LIGHT FIXTURES, EXIT LIGHTS, SPEAKERS, SMOKE DETECTORS, AND ALL OTHER CEILING MOUNTED DEVICES PRIOR TO BEGINNING REMOVAL.

SOUTH CAROLINA
MECHANICAL DESIGN, INC.
COLUMBIA, SC
No. C00096
CERTIFICATE OF AUTHORIZATION

MECHANICAL DESIGN INC.
4403 Broad River Road
Columbia, S.C. 29210
(803) 731-9834
(803) 731-9837 FAX
CONTACT: Danny Wilds
DATE: 06/16/17
COMM. NO. 163277

ARCHITECTURE
INTERIORS
PLANNING
WTS
WATSON TATE SAVORY

LIEBER COLLEGE HVAC RENOVATION

UNIVERSITY OF SOUTH CAROLINA
COLUMBIA, SC
State Project No: H27-Z313

SOUTH CAROLINA REGISTERED PROFESSIONAL ENGINEER No. 11155 6/16/17 DANNY WILDS

Project Number: 1704
Date: 15 JULY 2016

Revisions:

| NO. | ISSUED FOR | DATE |
|---|---|---|
| | | |

First Floor HVAC Demolition Plan

M-1-D

CONSTRUCTION DOCUMENTS

2/27/2017 10:10:58 AM N:\1610 USC Lieber College HVAC\Revit\1700 & 1704_USC Lieber College HVAC.rvt

These drawings are the property of Watson Tate Savory, Inc. and may not be used in whole or in part without written consent of the architects and any infringement is subject to legal action.

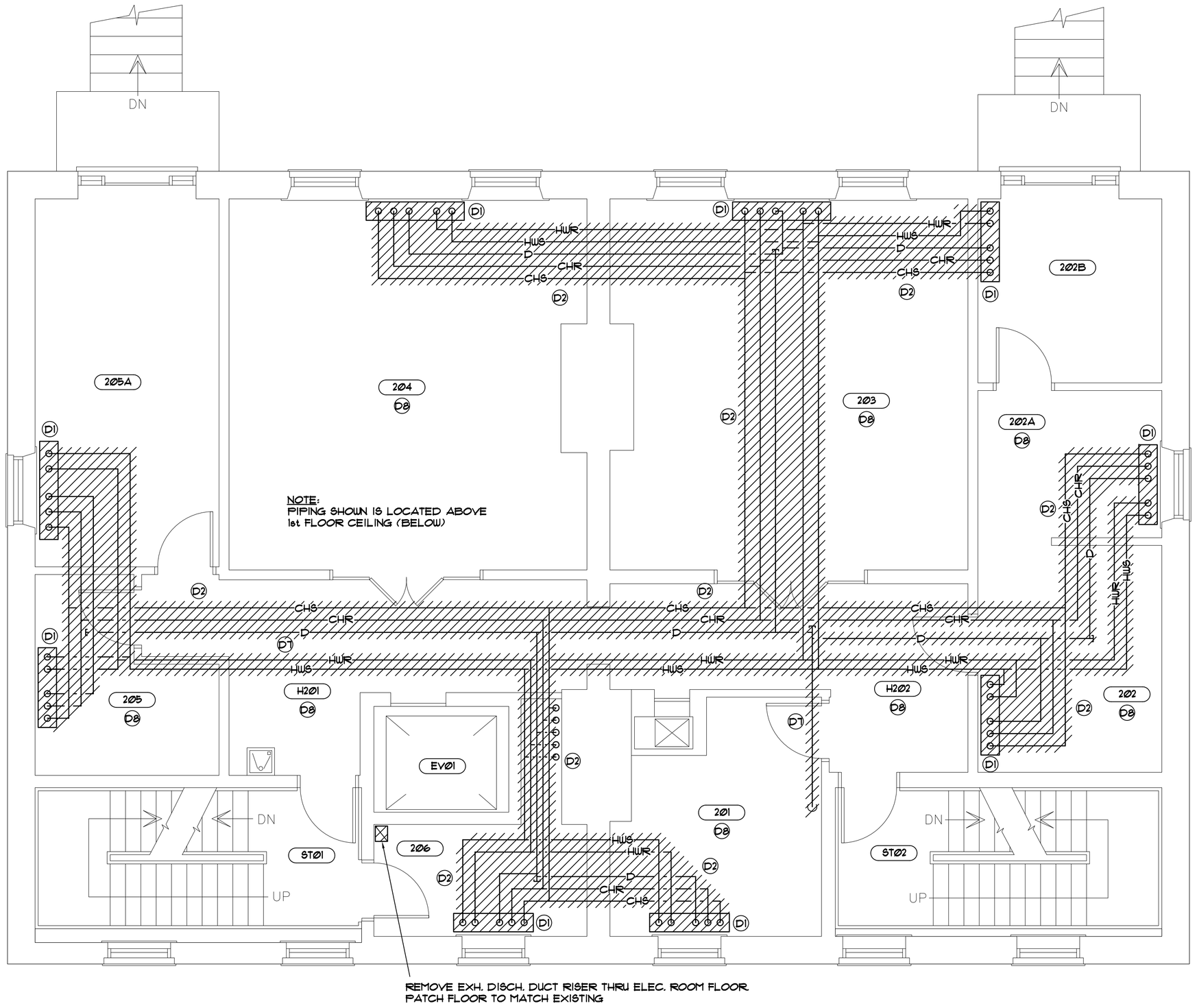


## SECOND FLOOR HVAC DEMOLITION PLAN

SCALE: 1/4" = 1'-0"

ARCHITECTURE
INTERIORS
PLANNING

WTS
WATSON TATE SAVORY

LIEBER COLLEGE HVAC RENOVATION

UNIVERSITY OF SOUTH CAROLINA
COLUMBIA, SC
State Project No: H27-Z313

SOUTH CAROLINA REGISTERED PROFESSIONAL ENGINEER No. 11155 6/16/17 DANNY WILDS

Project Number: 1704
Date: 15 JULY 2016

Revisions:

| NO. | ISSUED FOR | DATE |
|---|---|---|
| | | |

Second Floor
HVAC Demolition
Plan

M-2-D

CONSTRUCTION DOCUMENTS

SOUTH CAROLINA MECHANICAL DESIGN, INC. COLUMBIA, SC No. C00096 CERTIFICATE OF AUTHORIZATION

MECHANICAL DESIGN INC.
4403 Broad River Road
Columbia, S.C. 29210
(803) 731-9834
(803) 731-9837 FAX
CONTACT: Danny Wilds
DATE: 06/16/17
COMM. NO. 163277

2/27/2017 10:10:58 AM N:\1610 USC Lieber College HVAC\Revit\1703 & 1704_USC Lieber College HVAC.rvt

These drawings are the property of Watson Tate Savory, Inc. and may not be used in whole or in part without written consent of the architects and any infringement is subject to legal action.

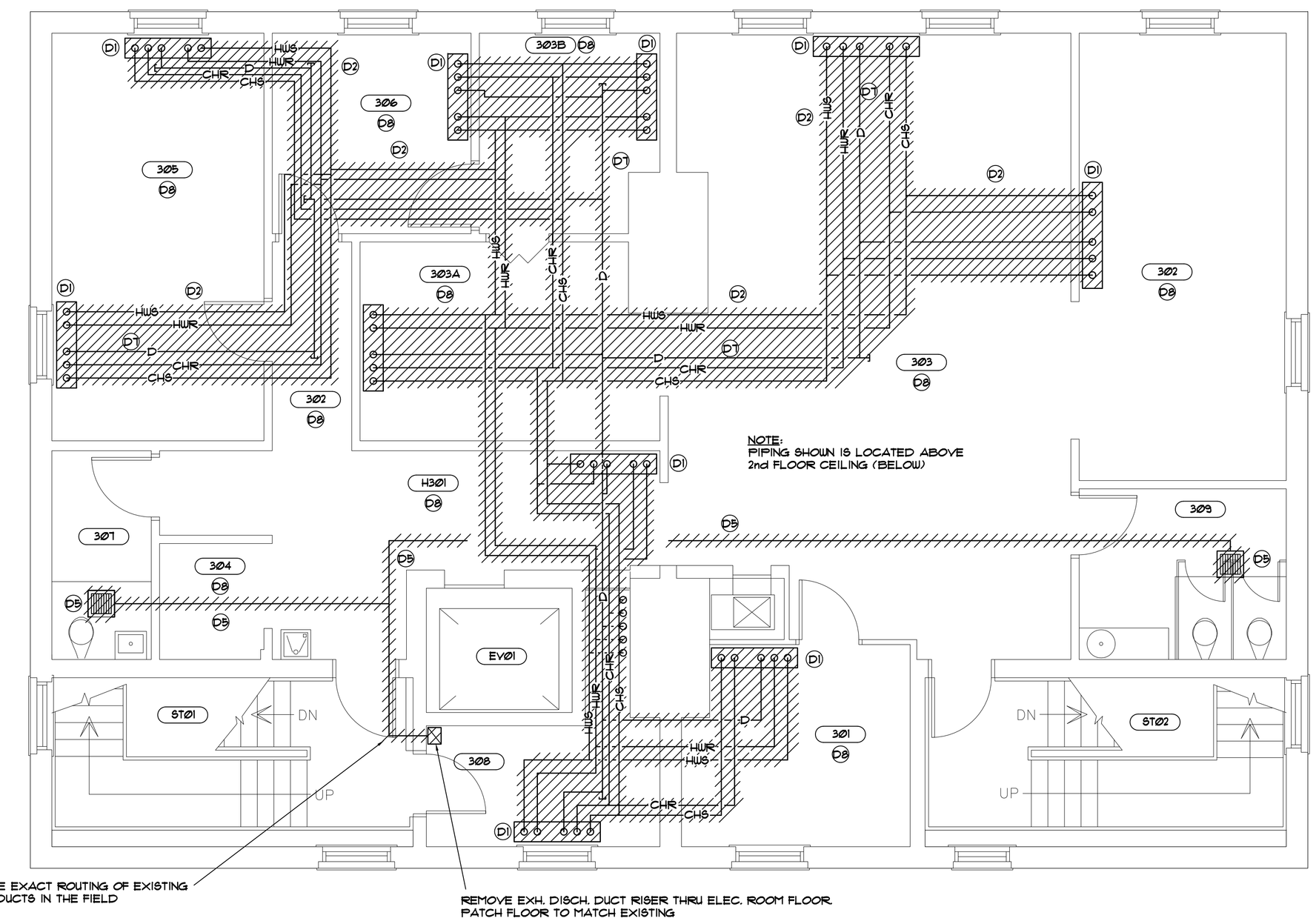


## THIRD FLOOR HVAC DEMOLITION PLAN

SCALE: 1/4" = 1'-0"

ARCHITECTURE
INTERIORS
PLANNING

WTS
WATSON TATE SAVORY

LIEBER COLLEGE HVAC RENOVATION

UNIVERSITY OF SOUTH CAROLINA
COLUMBIA, SC
State Project No: H27-Z313

SOUTH CAROLINA REGISTERED PROFESSIONAL ENGINEER No. 11155 6/16/17 DANNY WILDS

Project Number: 1704
Date: 15 JULY 2016

Revisions:

| NO. | ISSUED FOR | DATE |
|---|---|---|
| | | |

Third Floor
HVAC Demolition
Plan

M-3-D

CONSTRUCTION DOCUMENTS

SOUTH CAROLINA
MECHANICAL DESIGN, INC.
COLUMBIA, SC
No. C00096
CERTIFICATE OF AUTHORIZATION

MECHANICAL DESIGN INC.
4403 Broad River Road
Columbia, S.C. 29210
(803) 731-9834
(803) 731-9837 FAX
CONTACT: Danny Wilds
DATE: 06/16/17
COMM. NO. 163277

2/27/2017 10:10:58 AM N:\1610 USC Lieber College HVAC\Revit\1703 & 1704_USC Lieber College HVAC.rvt

These drawings are the property of Watson Tate Savory, Inc. and may not be used in whole or in part without written consent of the architects and any infringement is subject to legal action.

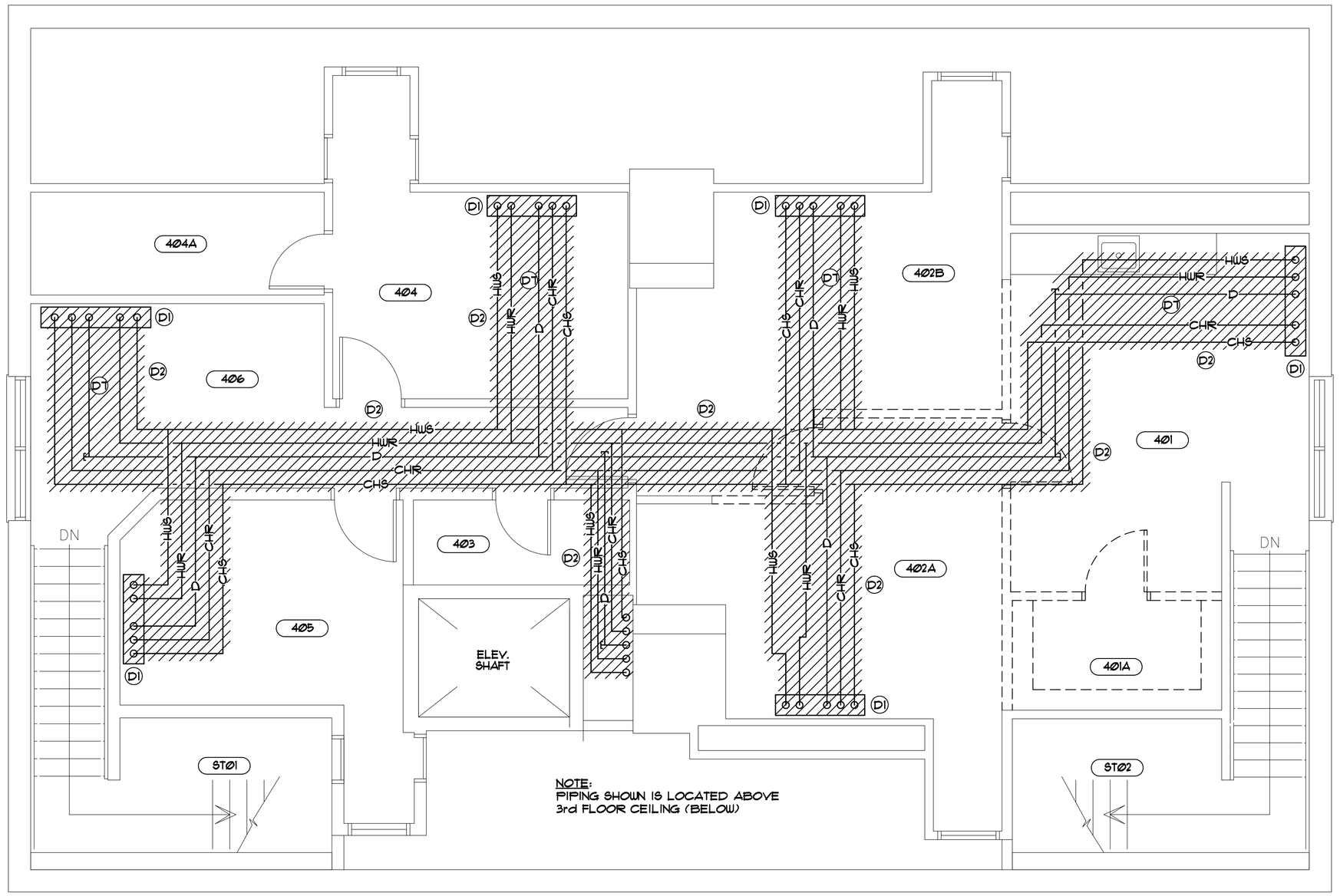


## FOURTH FLOOR HVAC DEMOLITION PLAN

SCALE: 1/4" = 1'-0"

MECHANICAL DESIGN, INC.
COLUMBIA, SC
No. C00096
SOUTH CAROLINA
CERTIFICATE OF AUTHORIZATION

MECHANICAL DESIGN INC.
4403 Broad River Road
Columbia, S.C. 29210
(803) 731-9834
(803) 731-9837 FAX
CONTACT: Danny Wilds

DATE: 06/16/17
COMM. NO. 163277

ARCHITECTURE
INTERIORS
PLANNING

WTS
WATSON TATE SAVORY

LIEBER COLLEGE HVAC RENOVATION

UNIVERSITY OF SOUTH CAROLINA
COLUMBIA, SC

State Project No: H27-Z313

SOUTH CAROLINA
REGISTERED PROFESSIONAL ENGINEER
No. 11155
6/16/17
DANNY WILDS

Project Number: 1704
Date: 15 JULY 2016

Revisions:

| NO. | ISSUED FOR | DATE |
|---|---|---|
| | | |

Fourth Floor
HVAC Demolition
Plan

M-4-D

CONSTRUCTION DOCUMENTS

2/27/2017 10:10:59 AM N:\1610 USC Lieber College HVAC\Revit\1703 & 1704_USC Lieber College HVAC.rvt

These drawings are the property of Watson Tate Savory, Inc. and may not be used in whole or in part without written consent of the architects and any infringement is subject to legal action.

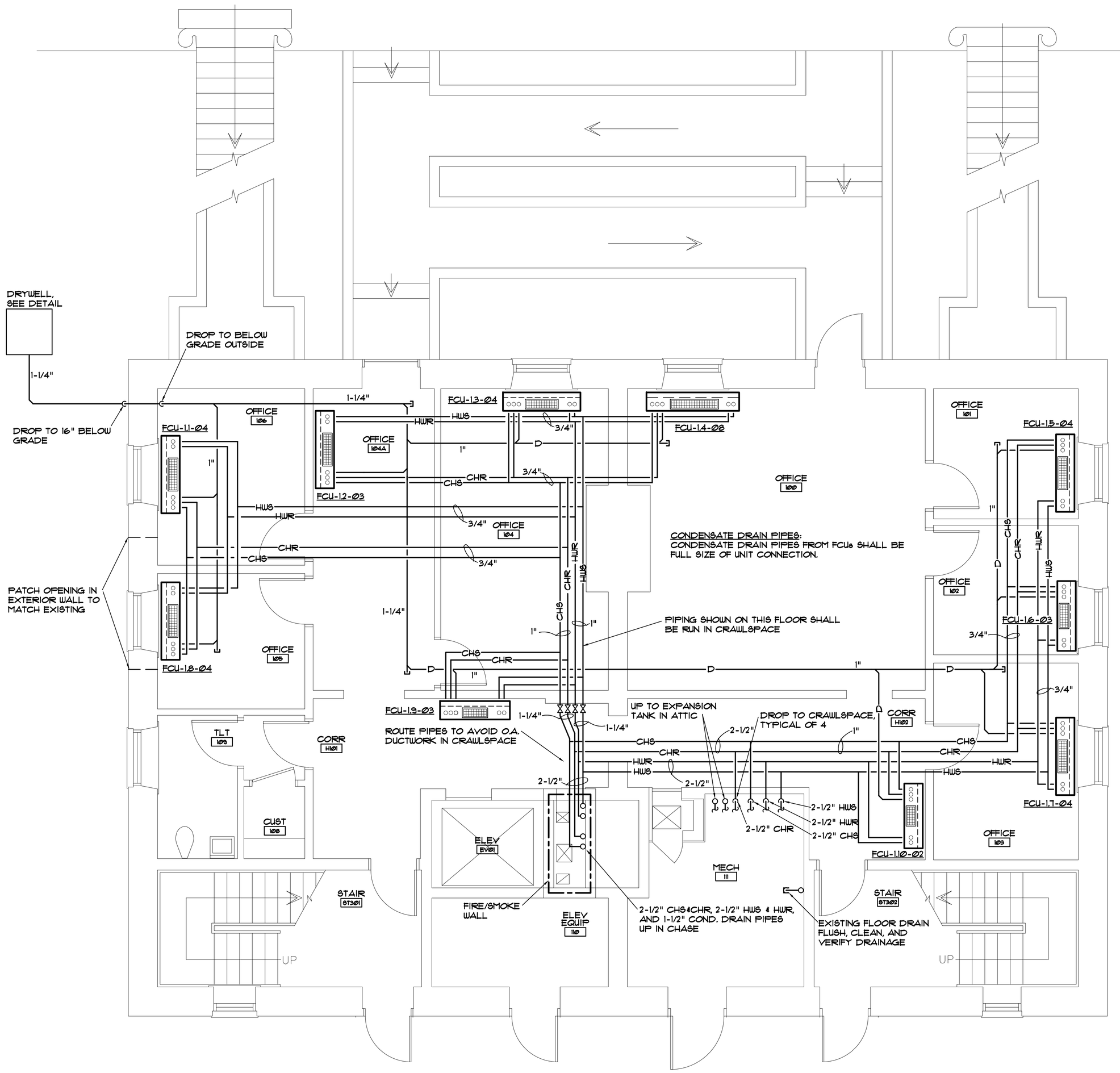


## FIRST FLOOR HVAC PIPING PLAN

SCALE: 1/4" = 1'-Ø"

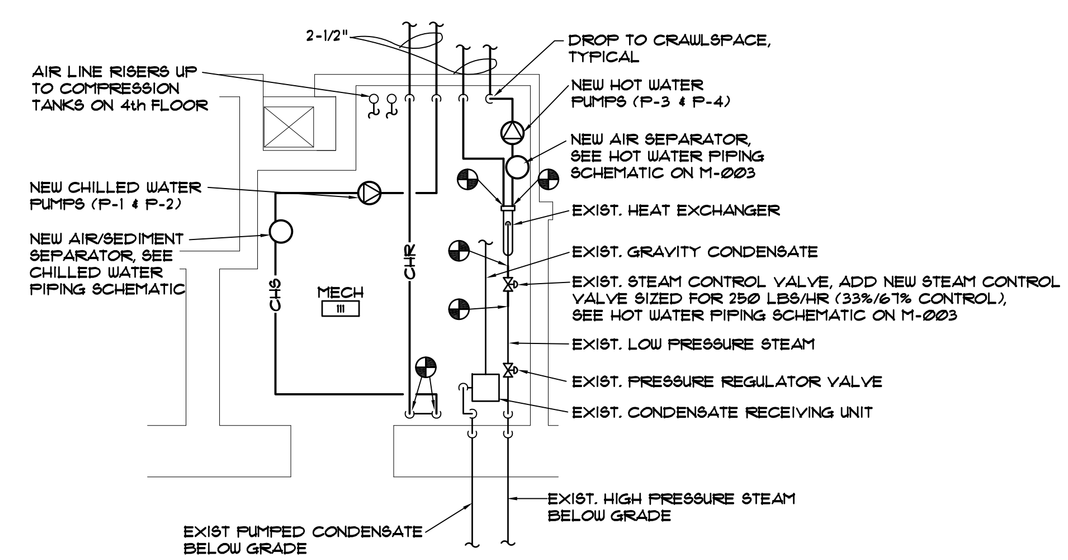


## MECHANICAL ROOM

SCALE: 1/4" = 1'-Ø"

SOUTH CAROLINA MECHANICAL DESIGN, INC. COLUMBIA, SC No. C00096 CERTIFICATE OF AUTHORIZATION

MECHANICAL DESIGN INC.
4403 Broad River Road
Columbia, S.C. 29210
(803) 731-9834
(803) 731-9837 FAX
CONTACT: Danny Wilds
DATE: 06/16/17
COMM. NO. 163277

ARCHITECTURE
INTERIORS
PLANNING

WTS
WATSON TATE SAVORY

LIEBER COLLEGE HVAC RENOVATION

UNIVERSITY OF SOUTH CAROLINA
COLUMBIA, SC
State Project No: H27-Z313

SOUTH CAROLINA REGISTERED PROFESSIONAL ENGINEER No. 11155 6/16/17 DANNY WILDS

Project Number: 1704
Date: 15 JULY 2016
Revisions:

| NO. | ISSUED FOR | DATE |
|---|---|---|
| | | |

FIRST Floor
HVAC Piping Plan

M-1-P

CONSTRUCTION DOCUMENTS

These drawings are the property of Watson Tate Savory, Inc. and may not be used in whole or in part without written consent of the architects and any infringement is subject to legal action.

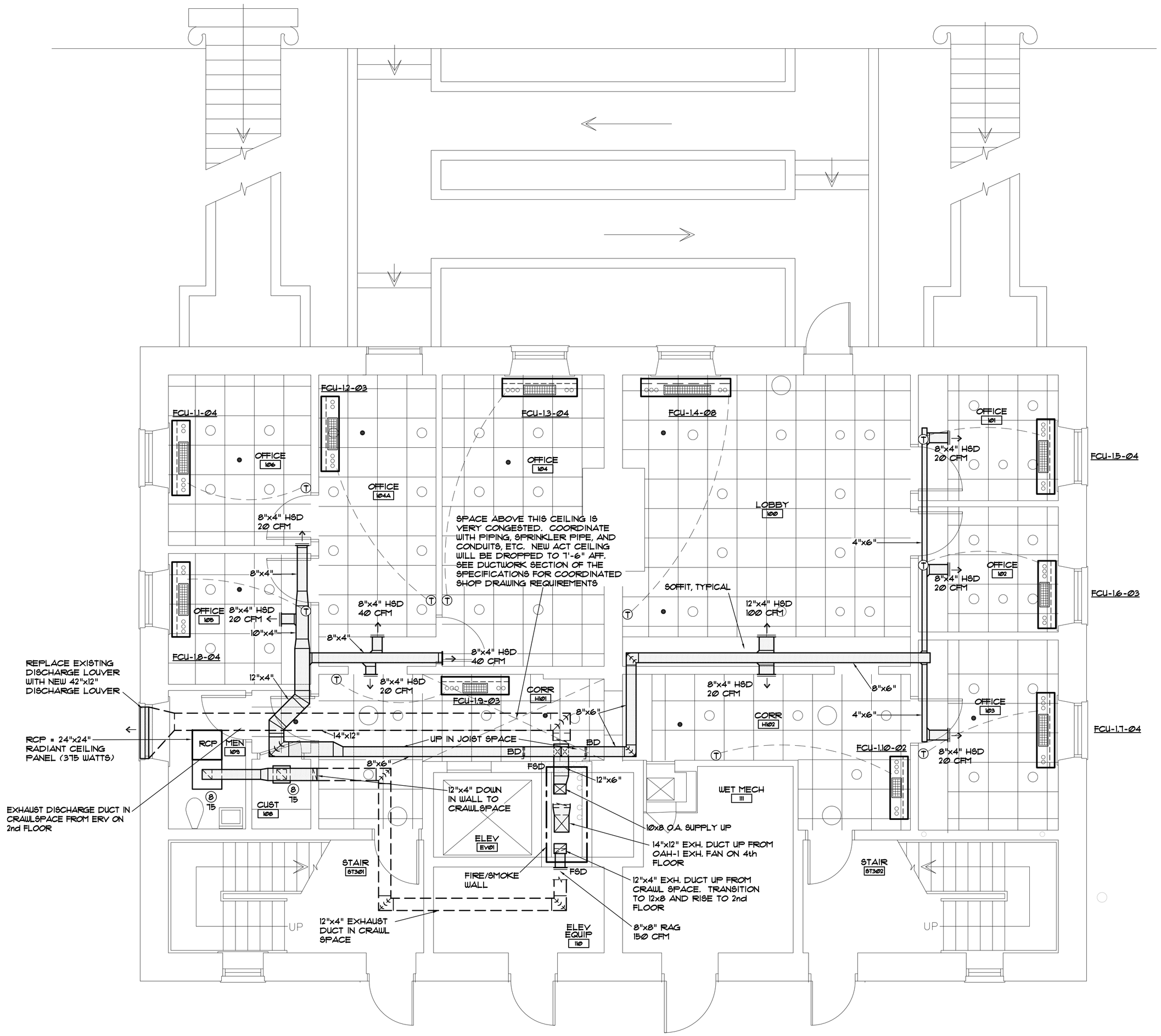


NORTH

## FIRST FLOOR HVAC DUCTWORK PLAN

SCALE: 1/4" = 1'-0"

ARCHITECTURE
INTERIORS
PLANNING

WTS
WATSON TATE SAVORY

LIEBER COLLEGE HVAC RENOVATION

UNIVERSITY OF SOUTH CAROLINA
COLUMBIA, SC
State Project No: H27-Z313

SOUTH CAROLINA PROFESSIONAL ENGINEER No. 11155 6/16/17 DANNY WILDS

Project Number: 1704
Date: 15 JULY 2016

Revisions:

| NO. | ISSUED FOR | DATE |
|---|---|---|
| | | |

FIRST Floor
HVAC Ductwork
Plan

M-1-R

CONSTRUCTION DOCUMENTS

SOUTH CAROLINA MECHANICAL DESIGN, INC. COLUMBIA, SC No. C00096 CERTIFICATE OF AUTHORIZATION

MECHANICAL DESIGN INC.
4403 Broad River Road
Columbia, S.C. 29210
(803) 731-9834
(803) 731-9837 FAX
CONTACT: Danny Wilds
DATE: 06/16/17
COMM. NO. 163277

2/27/2017 10:10:58 AM N:\1610 USC Lieber College HVAC\Revit\1703 & 1704_USC Lieber College HVAC.rvt

These drawings are the property of Watson Tate Savory, Inc. and may not be used in whole or in part without written consent of the architects and any infringement is subject to legal action.

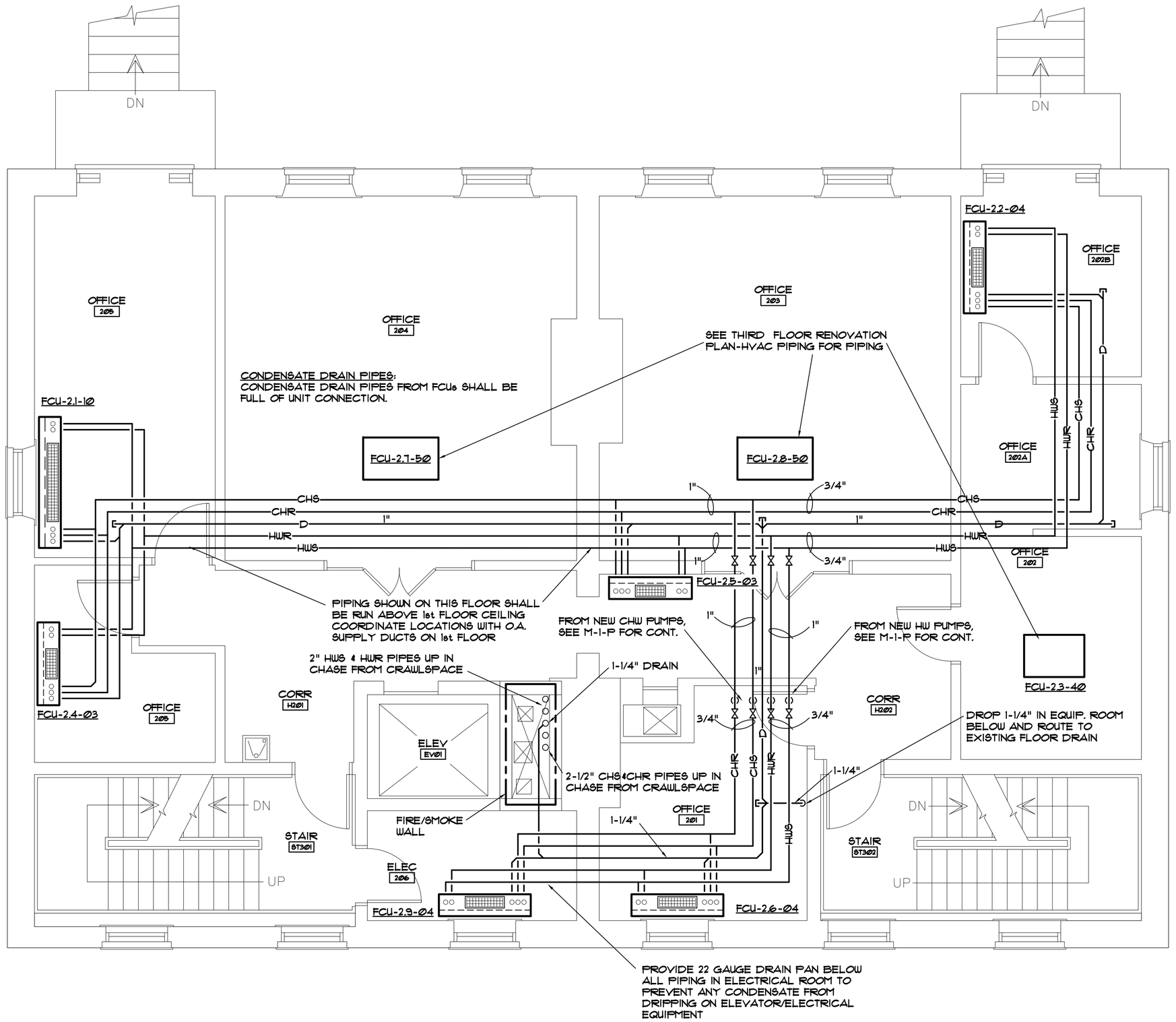


## SECOND FLOOR HVAC PIPING PLAN

SCALE: 1/4" = 1'-0"

ARCHITECTURE
INTERIORS
PLANNING

WTS
WATSON TATE SAVORY

# LIEBER COLLEGE HVAC RENOVATION

UNIVERSITY OF SOUTH CAROLINA
COLUMBIA, SC
State Project No: H27-Z313

SOUTH CAROLINA REGISTERED PROFESSIONAL ENGINEER
No. 11155
6/16/17
DANNY WILDS

Project Number: 1704
Date: 15 JULY 2016

Revisions:

| NO. | ISSUED FOR | DATE |
|---|---|---|
| | | |

Second Floor
HVAC Piping Plan

M-2-P

CONSTRUCTION DOCUMENTS

SOUTH CAROLINA
MECHANICAL DESIGN, INC.
COLUMBIA, SC
No. C00096
CERTIFICATE OF AUTHORIZATION

MECHANICAL DESIGN INC.
4403 Broad River Road
Columbia, S.C. 29210
(803) 731-9834
(803) 731-9837 FAX
CONTACT: Danny Wilds
DATE: 06/16/17
COMM. NO. 163277

2/27/2017 10:10:58 AM N:\1610 USC Lieber College\ HVAC\Revit\1703 & 1704_USC Lieber College HVAC.rvt

These drawings are the property of Watson Tate Savory, Inc. and may not be used in whole or in part without written consent of the architects and any infringement is subject to legal action.

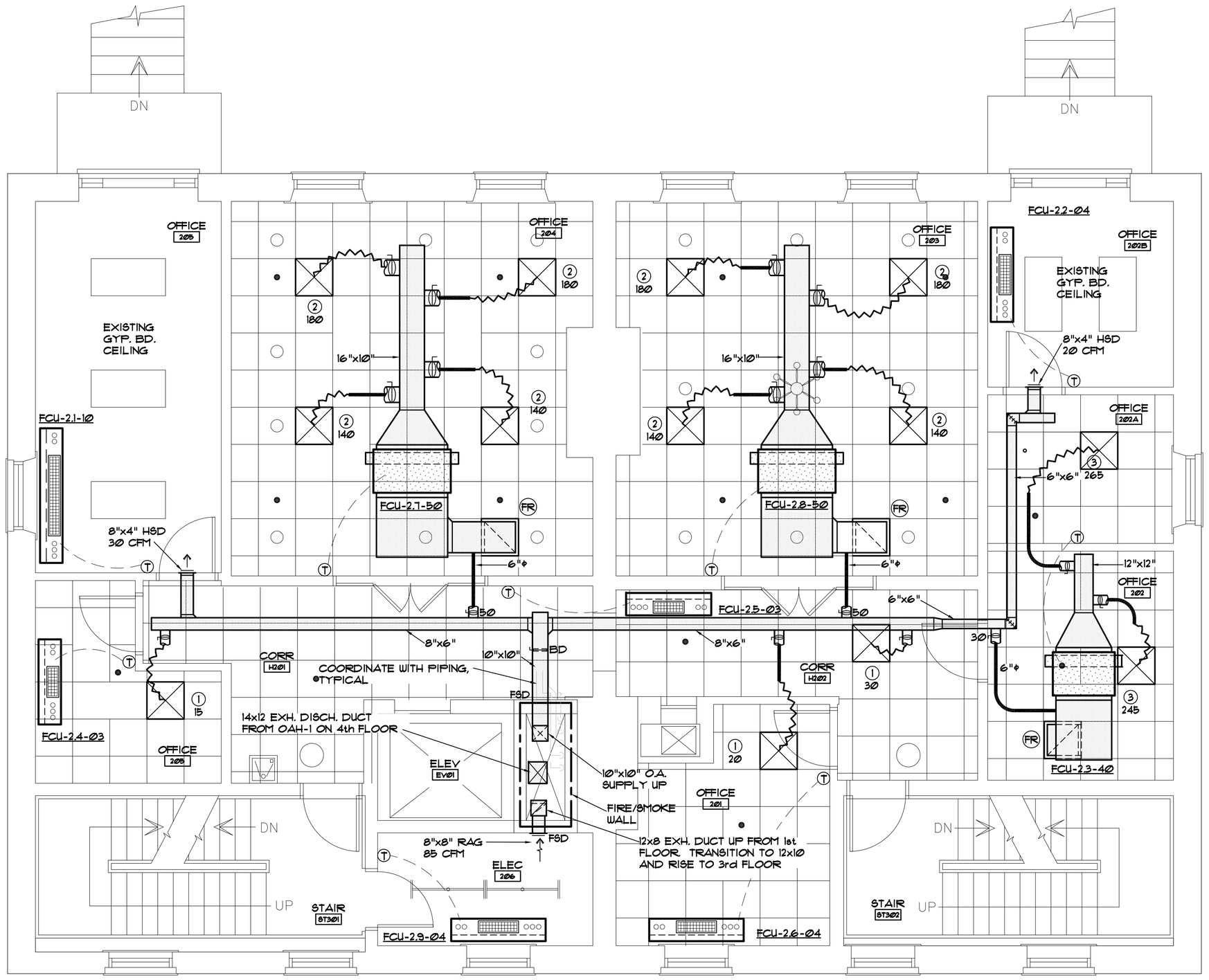


## SECOND FLOOR RENOVATION PLAN-HVAC DUCT

SCALE: 1/4" = 1'-0"

ARCHITECTURE
INTERIORS
PLANNING

WTS
WATSON TATE SAVORY

LIEBER COLLEGE HVAC RENOVATION

UNIVERSITY OF SOUTH CAROLINA
COLUMBIA, SC
State Project No: H27-Z313

SOUTH CAROLINA REGISTERED PROFESSIONAL ENGINEER No. 11155 6/16/17 DANNY WILDS

Project Number: 1704
Date: 15 JULY 2016

Revisions:

| NO. | ISSUED FOR | DATE |
|---|---|---|
| | | |

SECOND Floor HVAC Ductwork Plan

M-2-R

CONSTRUCTION DOCUMENTS

SOUTH CAROLINA MECHANICAL DESIGN, INC. COLUMBIA, SC No. C00096 CERTIFICATE OF AUTHORIZATION

MECHANICAL DESIGN INC.
4403 Broad River Road
Columbia, S.C. 29210
(803) 731-9834
(803) 731-9837 FAX
CONTACT: Danny Wilds
DATE: 06/16/17
COMM. NO. 163277

2/27/2017 10:10:58 AM N:\1610 USC Lieber College HVAC\Revit\1703 & 1704_USC Lieber College HVAC.rvt

These drawings are the property of Watson Tate Savory, Inc. and may not be used in whole or in part without written consent of the architects and any infringement is subject to legal action.

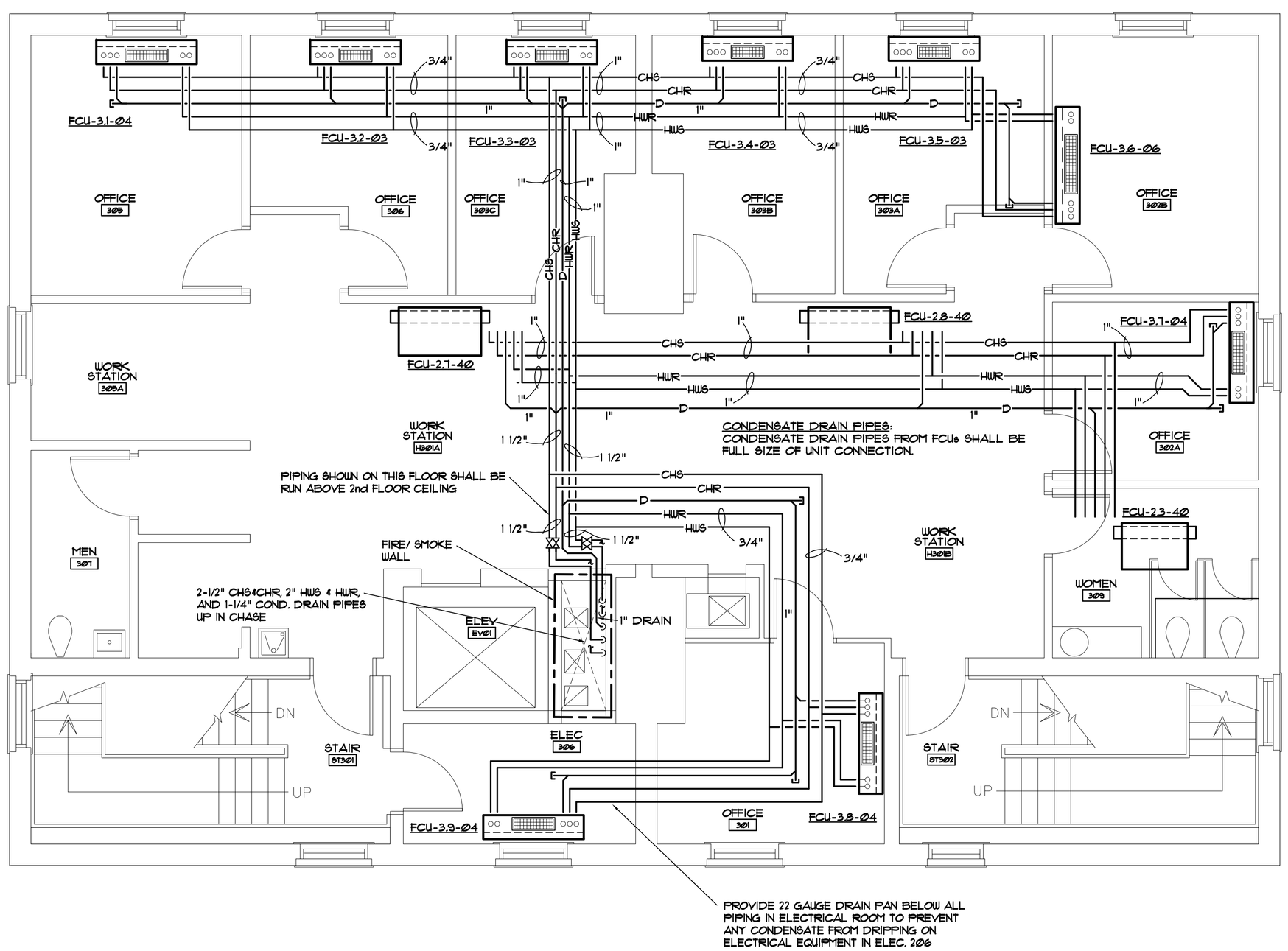


NORTH

## THIRD FLOOR HVAC PIPING PLAN

SCALE: 1/4" = 1'-Ø"

ARCHITECTURE
INTERIORS
PLANNING

WTS
WATSON TATE SAVORY

LIEBER COLLEGE HVAC RENOVATION

UNIVERSITY OF SOUTH CAROLINA
COLUMBIA, SC
State Project No: H27-Z313

SOUTH CAROLINA REGISTERED PROFESSIONAL ENGINEER No. 11155 DANNY WILDS 6/16/17

Project Number: 1704
Date: 15 JULY 2016
Revisions:

| NO. | ISSUED FOR | DATE |
|---|---|---|
| | | |

Third Floor
HVAC Piping Plan

M-3-P

CONSTRUCTION DOCUMENTS

SOUTH CAROLINA
MECHANICAL DESIGN, INC.
COLUMBIA, SC
No. C00096
CERTIFICATE OF AUTHORIZATION

MECHANICAL DESIGN INC.
4403 Broad River Road
Columbia, S.C. 29210
(803) 731-9834
(803) 731-9837 FAX
CONTACT: Danny Wilds
DATE: 06/16/17
COMM. NO. 163277

2/27/2017 10:10:58 AM N:\16\10 USC Lieber College HVAC\Revit\1703 & 1704_USC Lieber College HVAC.rvt

These drawings are the property of Watson Tate Savory, Inc. and may not be used in whole or in part without written consent of the architects and any infringement is subject to legal action.

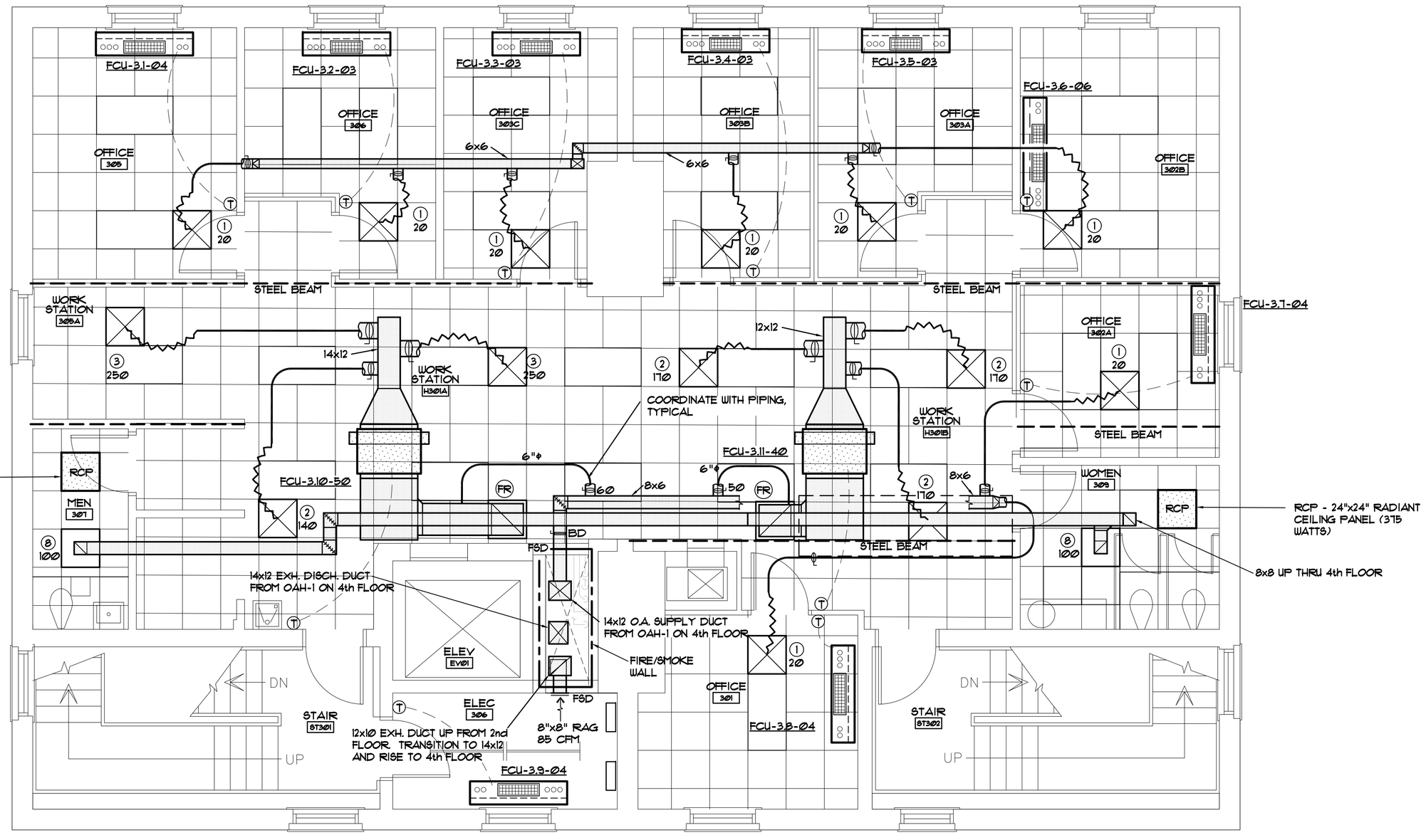


## THIRD FLOOR RENOVATION PLAN-HVAC DUCT

SCALE: 1/4"=1'-Ø"

ARCHITECTURE
INTERIORS
PLANNING

WTS
WATSON TATE SAVORY

LIEBER COLLEGE HVAC RENOVATION

UNIVERSITY OF SOUTH CAROLINA
COLUMBIA, SC
State Project No: H27-Z313

SOUTH CAROLINA REGISTERED PROFESSIONAL ENGINEER No. 11155 6/16/17 DANNY WILDS

Project Number: 1704
Date: 15 JULY 2016

Revisions:

| NO. | ISSUED FOR | DATE |
|---|---|---|
| | | |

Third Floor
HVAC Ductwork
Plan

M-3-R

CONSTRUCTION DOCUMENTS

SOUTH CAROLINA MECHANICAL DESIGN, INC. COLUMBIA, SC No. C00096 CERTIFICATE OF AUTHORIZATION

MECHANICAL DESIGN INC.
4403 Broad River Road
Columbia, S.C. 29210
(803) 731-9834
(803) 731-9837 FAX
CONTACT: Danny Wilds
DATE: 06/16/17
COMM. NO. 163277

2/27/2017 10:10:58 AM N:\1610 USC Lieber College HVAC\Revit\1703 & 1704_USC Lieber College HVAC.rvt

These drawings are the property of Watson Tate Savory, Inc., and may not be used in whole or in part without written consent of the architects and any infringement is subject to legal action.

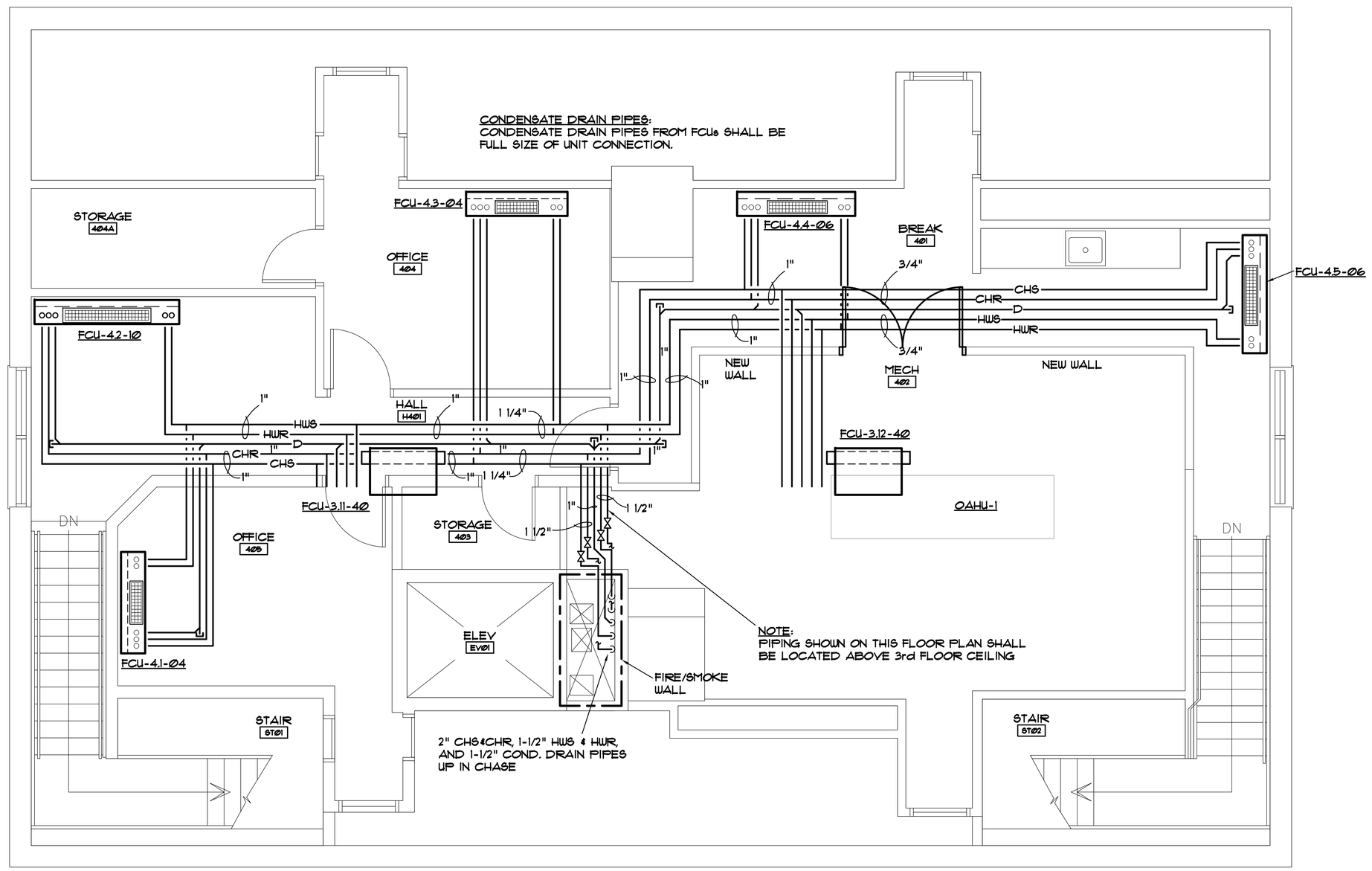


## FOURTH FLOOR HVAC PIPING PLAN

SCALE: 1/4" = 1'-Ø"

ARCHITECTURE
INTERIORS
PLANNING

WTS
WATSON TATE SAVORY

LIEBER COLLEGE HVAC RENOVATION

UNIVERSITY OF SOUTH CAROLINA
COLUMBIA, SC
State Project No: H27-Z313

SOUTH CAROLINA REGISTERED PROFESSIONAL ENGINEER
No. 11155
6/16/17
DANNY WILDS

Project Number: 1704
Date: 15 JULY 2016

Revisions:

| NO. | ISSUED FOR | DATE |
|---|---|---|
| | | |

Fourth Floor
HVAC Piping Plan

M-4-P

CONSTRUCTION DOCUMENTS

SOUTH CAROLINA
MECHANICAL DESIGN, INC.
COLUMBIA, SC
No. C00096
CERTIFICATE OF AUTHORIZATION

MECHANICAL DESIGN INC.
4403 Broad River Road
Columbia, S.C. 29210
(803) 731-9834
(803) 731-9837 FAX
CONTACT: Danny Wilds
DATE: 06/16/17
COMM. NO. 163277

2/27/2017 10:10:58 AM N:\1610 USC Lieber College HVAC\Revit\1703 & 1704_USC Lieber College HVAC.rvt

These drawings are the property of Watson Tate Savory, Inc. and may not be used in whole or in part without written consent of the architects and any infringement is subject to legal action.

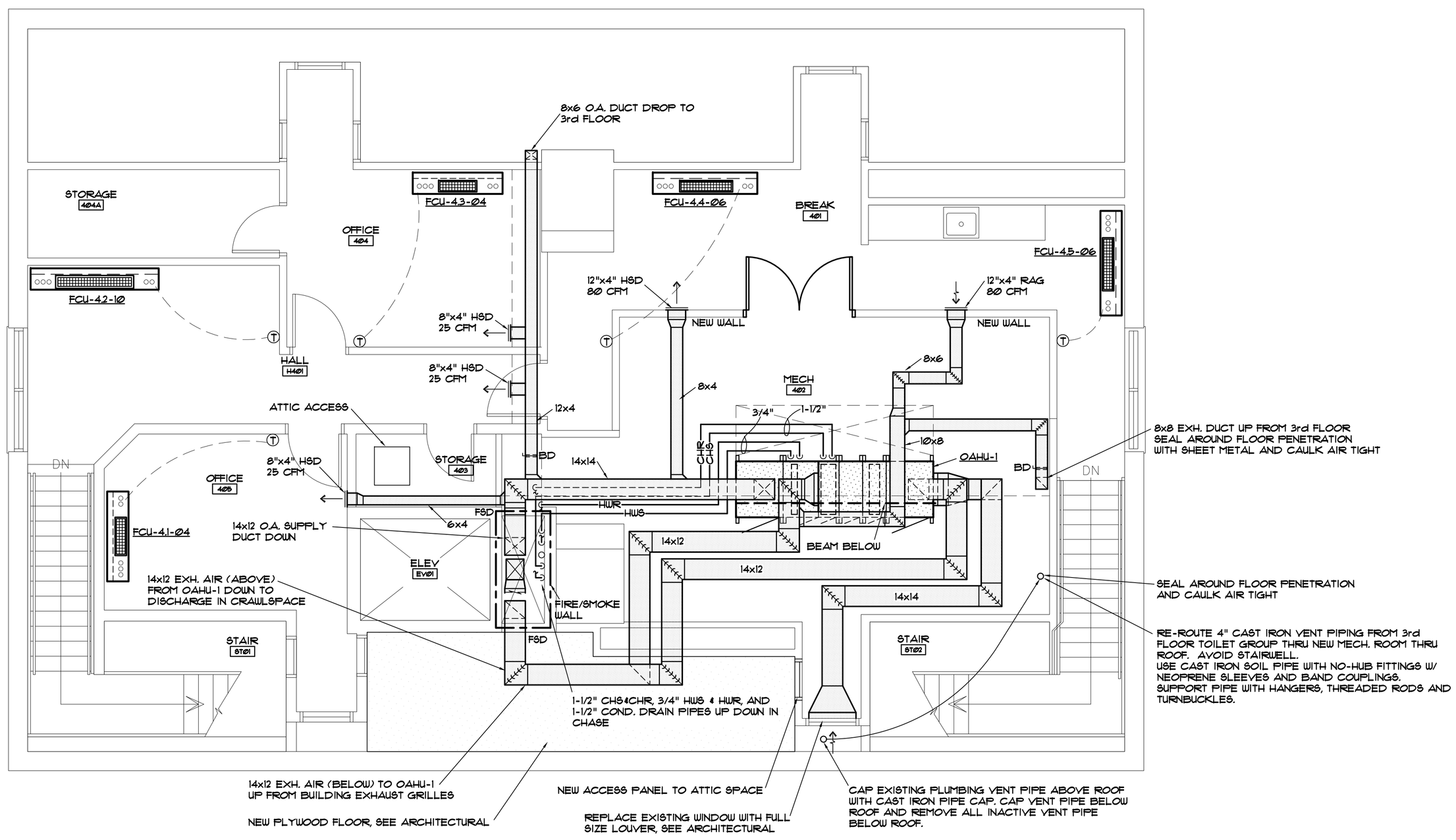


NORTH

## FOURTH FLOOR RENOVATION PLAN-HVAC DUCT

SCALE: 1/4" = 1'-Ø"

SOUTH CAROLINA MECHANICAL DESIGN, INC. COLUMBIA, SC No. C00096 CERTIFICATE OF AUTHORIZATION

MECHANICAL DESIGN INC.
4403 Broad River Road
Columbia, S.C. 29210
(803) 731-9834
(803) 731-9837 FAX
CONTACT: Danny Wilds
DATE: 06/16/17
COMM. NO. 163277

ARCHITECTURE
INTERIORS
PLANNING

WTS
WATSON TATE SAVORY

LIEBER COLLEGE HVAC RENOVATION

UNIVERSITY OF SOUTH CAROLINA
COLUMBIA, SC
State Project No: H27-Z313

SOUTH CAROLINA REGISTERED PROFESSIONAL ENGINEER No. 11155 6/16/17 DANNY WILDS

Project Number: 1704
Date: 15 JULY 2016

Revisions:

| NO. | ISSUED FOR | DATE |
|---|---|---|
| | | |

Fourth Floor
HVAC Ductwork
Plan

M-4-R

CONSTRUCTION DOCUMENTS

2/27/2017 10:10:59 AM N:\1610 USC Lieber College HVAC\Revit\1703 & 1704_USC Lieber College HVAC.rvt