UNIVERSITY OF SOUTH CAROLINA
SCHOOL OF JOURNALISM BROADCAST STUDIO

BID DOCUMENTS
OCTOBER 31, 2014

COLUMBIA, SOUTH CAROLINA

STATE PROJECT NUMBER: H27-6099-MJ

ARCHITECT'S PROJECT NUMBER: U-646-12-3

STATE LOCATION MAP

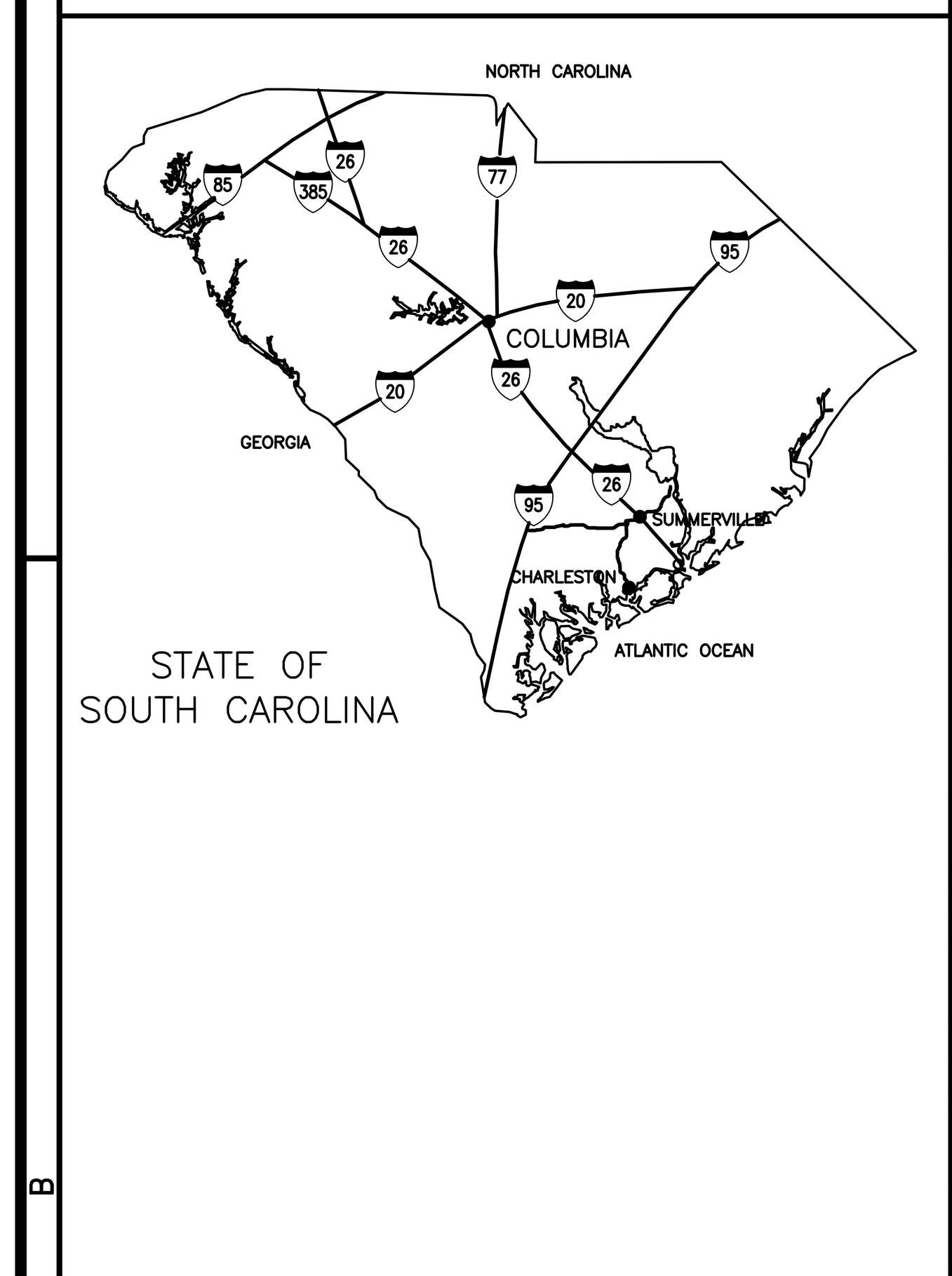

VICINITY LOCATION MAPS

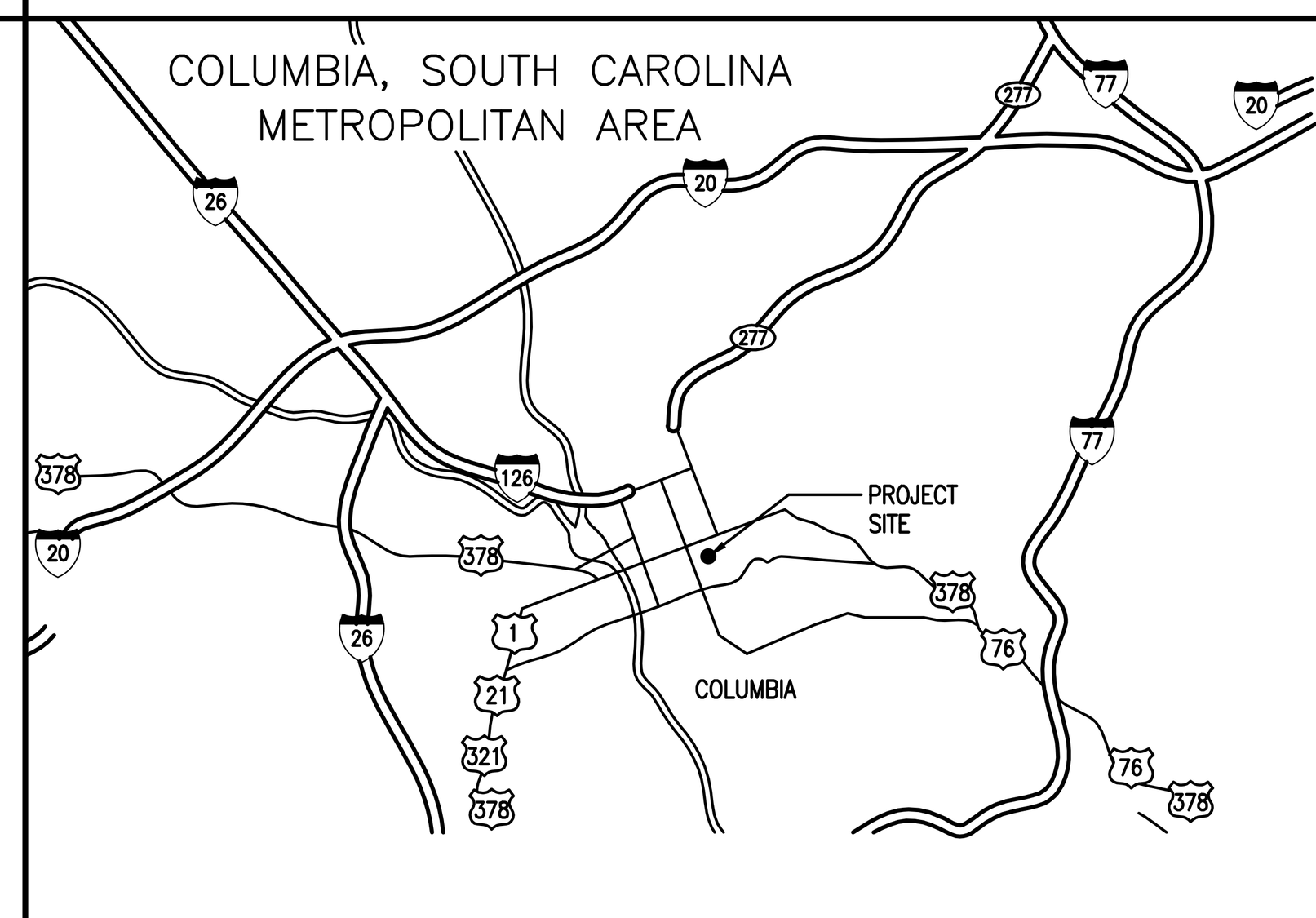



820 SUMTER STREET

MATERIAL DESIGNATIONS

- COMPACTED EARTH
- POROUS FILL (STONE OR GRAVEL)
- CONCRETE
- CONCRETE MASONRY UNIT (CMU)
- BRICK
- SAND, PLASTER, CEMENT, GROUT
- STEEL
- WOOD (ROUGH)
- WOOD (FINISHED)
- PLYWOOD
- BATT INSULATION
- GYPSUM BOARD
- RIGID INSULATION

ABBREVIATIONS

∠	ANGLE
@	AT
AFF	ABOVE FINISH FLOOR
ALUM	ALUMINUM
ARCH	ARCHITECTURAL
BLKG	BLOCKING
BU	BUILT-UP ROOF
℄	CENTERLINE
CJ	CONTROL JOINT
CLG	CEILING
CTR	CENTER
CONC	CONCRETE
CMU	CONCRETE MASONRY UNIT
CONT	CONTINUOUS
DIA	DIAMETER
DS	DOWN SPOUT
DWG	DRAWING
EXT	EXTERIOR
EXIST	EXISTING
EA	EACH
EJ	EXPANSION JOINT
ELEC	ELECTRICAL
EL	ELEVATION
ELEV	ELEVATOR
EQUIP	EQUIPMENT
EWC	ELECTRIC WATER COOLER
FIN	FINISH
FD	FLOOR DRAIN
FOF	FACE OF FINISH
FOS	FACE OF STUD
FR	FIRE RETARDANT
FV	FIELD VERIFY
GA	GAUGE
GYP BD	GYPSUM BOARD
HM	HOLLOW METAL
HORIZ	HORIZONTAL
HT	HEIGHT
HVAC	HEATING VENTILATION AIR-CONDITIONING
ID	INSIDE DIAMETER
INSUL	INSULATION
JT	JOINT
LAV	LAVATORY
MAX	MAXIMUM
MECH	MECHANICAL
MFR	MANUFACTURER
MIN	MINIMUM
MO	MASONRY OPENING
NIC	NOT IN CONTRACT
NOM	NOMINAL
NTS	NOT TO SCALE
OC	ON CENTER
OD	OUTSIDE DIAMETER
OPNG	OPENING
OPP	OPPOSITE
P	PAINT
PL	PAIR
PR	PLATE, PROPERTY LINE
PT	PRESSURE TREATED
R, RAD	RADIUS
REQD	REQUIRED
RD	ROOF DRAIN
RO	ROUGH OPENING
SF	SQUARE FEET
SIM	SIMILAR
SPEC	SPECIFICATIONS
SS	STAINLESS STEEL
STD	STANDARD
STR	STRUCTURAL
SUSP	SUSPENDED
TBS	TO BE SELECTED
TOS	TOP OF STEEL
TOW	TOP OF WALL
TYP	TYPICAL
UNO	UNLESS NOTED OTHERWISE
VERT	VERTICAL
VCT	VINYL COMPOSITION TILE
W/	WITH
WC	WATER CLOSET
WR	WATER RESISTANT
WWF	WELDED WIRE FABRIC
WD	WOOD

ARCHITECTURAL SYMBOLS

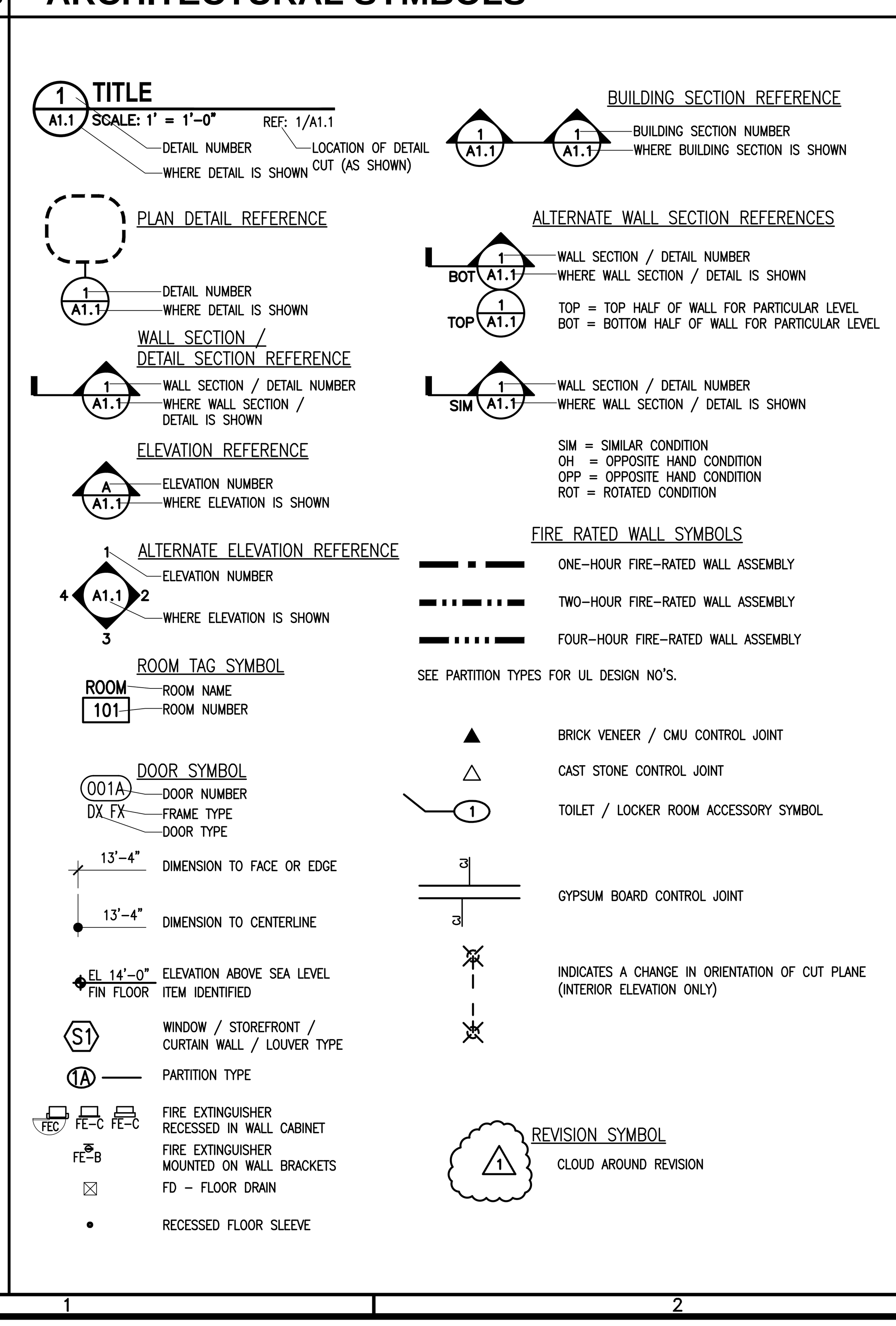

CODE ANALYSIS AND STANDARDS

PROJECT DESIGNED IN ACCORDANCE WITH:

1. INTERNATIONAL BUILDING CODE, 2012 EDITION.
2. INTERNATIONAL FIRE CODE, 2012 EDITION
3. INTERNATIONAL ENERGY CONSERVATION CODE, 2009 EDITION
4. INTERNATIONAL FUEL GAS CODE, 2012 EDITION
5. INTERNATIONAL MECHANICAL CODE, 2012 EDITION
6. INTERNATIONAL PLUMBING CODE, 2012 EDITION
7. NATIONAL ELECTRICAL CODE, NFPA 70, 2011 EDITION.
8. NATIONAL ELECTRICAL SAFETY CODE, IEEE-CE-2012 EDITION.
9. STATE FIRE MARSHALL RULES, REGULATIONS, AND POLICIES, SEE http://www.llr.state.sc.us/firemarshal.asp.
10. ICC/ANSI-A117.1-LATEST EDITION, ACCESSIBLE AND USABLE BUILDINGS AND FACILITIES.
11. STATE OF SC TELEPHONE EQUIPMENT ROOM AND COMMUNICATIONS/DATA SYSTEM POLICIES AS FORMULATED BY THE DIVISION OF STATE INFORMATION TECHNOLOGY (DSIT).

TABLE 5-1 FLOOD HAZARD INFORMATION and FLOOD LOADS:

FLOOD HAZARD AREA

BASE FLOOD ELEVATION N/A MSL
DESIGN FLOOD ELEVATION N/A MSL
NGVD or FIRM 45079C 0094H
IBC 1612.3 and ASCE 24

NON HIGH-VELOCITY WAVE ACTION N/A

ELEVATION OF LOWEST PROPOSED FLOOR 306.2 MSL MEET ASCE 24 SECTION 2.6.2.1
DRY FLOODPROOFING ☐NO ☐YES PER ASCE 24

HIGH-VELOCITY WAVE ACTION N/A

ELEVATION OF BOTTOM OF LOWEST HORIZONTAL STRUCTURAL MEMBER OF LOWEST FLOOR ________ MSL
FLOTATION RESISTANCE ☐NO ☐YES PER ASCE 24
BREAKAWAY WALL ☐NO ☐YES PER ASCE 24

IBC 1612 AND SE-900, AS APPLICABLE

ZONING CERTIFICATION:

"I HEREBY CERTIFY THAT, TO THE BEST OF MY KNOWLEDGE, THESE PLANS COMPLY WITH APPLICABLE ZONING ORDINANCES, AND THAT PLANS HAVE BEEN SUBMITTED TO APPROPRIATE AUTHORITY OF THEIR REVIEW AND/OR APPROVAL."

SIGNED: [signature] OCTOBER 1, 2014
ARCHITECT/ENGINEER DATE

EROSION AND SEDIMENT REDUCTION/STORMWATER MANAGEMENT:
DESIGNER'S CERTIFICATION:

"I HEREBY CERTIFY THAT THE MEASURES IN THIS PLAN ARE DESIGNED TO CONTROL EROSION, RETAIN SEDIMENT ON THE SITE, AND MANAGE STORMWATER IN A MANNER THAN NEITHER ANY ON-SITE NOR OFF-SITE DAMAGE OR PROBLEM IS CAUSED OR INCREASED, THAT ALL STRUCTURAL MEASURES ARE DESIGNED TO THE MINIMUM STANDARDS FOR HEALTH AND SAFETY, AND THAT ALL THE PROVISIONS OF THE PLAN ARE IN COMPLIANCE WTIH THE REGULATIONS CONTAINED IN CHAPTER 72, ARTICLE 2, SC CODE OF REGULATIONS (EROSION AND SEDIMENT REDUCTION AND STORMWATER MANAGEMENT REGULATIONS)"

SIGNED: [signature] OCTOBER 1, 2014
ENGINEER OR REGISTERED LANDSCAPE ARCHITECT DATE

TABLE 5-2 SOIL & SITE:

SOILS INVESTIGATION (IF REQUIRED) ☐NO ☒YES PER IBC 1803.2

SOILS CLASSIFICATION
SITE CLASS (SEISMIC) CLASS C PER IBC 1613.5.2
CLASSES SOIL OF MATERIALS (UCS SYSTEM) SC PER IBC 1803.5.1
ALLOWABLE FOOTING BEARING PRESSURE 2500 psf

MINIMUM DESIGN SOIL BEARING LOAD N/A psf PER IBC 1806.2

COMPACTION
SUBGRADE 98 PERCENT ☒ASTM D698 ☐ASTM D1557 ☐AASHTO (only for paving & roads)
BASE 98 PERCENT ☒ASTM D698 ☐ASTM D1557 ☐AASHTO (only for paving & roads)
OTHER XX PERCENT ☐ASTM D698 ☐ASTM D1557 ☐AASHTO (only for paving & roads)

MINIMUM DESIGN SOIL LATERAL LOAD N/A psf PER IBC 1610.1

FOOTINGS
UNDISTURBED FOOTINGS ☐ NO ☒ YES
COMPACTED FILL MATERIAL ☐ NO ☒ YES PER IBC 1804.5

ELEVATIONS
ELEVATION OF WATER TABLE <302.00 MSL
ELEVATION OF LOWEST FOOTING 303.20 MSL
ELEVATION OF LOWEST FLOOR OR BASEMENT 306.20 MSL

TABLE 5-3 BASIC BUILDING CODE INFORMATION:

CONSTRUCTION CLASSIFICATION	TYPE II B - NON COMBUSTIBLE MATERIAL (IBC 602)		
OCCUPANCY GROUP (INDICATE ALL) (NOTE IBC 506.5)	B (VOCATIONAL) (IBC 302)		
OCCUPANCY GROUP (indicate most restrictive)	B (IBC 503)		
Does building require Incidental Use Area Separation?	☒NO ☐YES	(IBC 509)	
Does building have Accessory Occpancy (ies)? What percent of story is accessory occupancy	☒NO ☐YES	(IBC 508.2)	
MIXED OCCUPANCY	☒NO ☐YES	(IBC 508)	
NON SEPARATED	☒NO ☐YES	(IBC 508.3)	
SEPARATED	☒NO ☐YES	(IBC 508.4) (IBC 506.5)	

OTHER FIRE PROTECTION SYSTEM, DEVICES or FEATURES
If the building has any special or notable fire protection or safety feature or hazard the designer should list them here, describe the performance characteristics and refer to locations in construction documents. (e.g. fire extinguishers, smoke-evacuation/control/compartments. Note IBC 414.1.3.)

TABLE 5-4 BUILDING AREA:

FLOOR OR LEVEL	SQUARE FOOTAGE (AS DESIGNED) TOTAL DESIGN AREA	SQUARE FOOTAGE AS ALLOWED BY IBC: WITHOUT INCREASE (IBC TABLE 503)	FRONTAGE INCREASE (IBC TABLE 506.2)	SPRINKLER INCREASE (IBC TABLE 506.3)	TOTAL ALLOWABLE (IBC 506.1)
FIRST	1363	23,000	NOT INCLUDED	NOT INCLUDED	23,000
MECH. PLATFORM	303	N/A			
TOTAL FLOOR AREA	1666				23,000

TABLE 5-5 BUILDING HEIGHT:

	AS DESIGNED IN FEET	AS DESIGNED IN STORIES	AS ALLOWED BY IBC IN FEET	AS ALLOWED BY IBC IN STORIES
WITHOUT ANY ALLOWABLE INCREASE (PER IBC TABLE 503)			60 FT	3
ALLOWABLE HEIGHT INCREASE (PER IBC 504.2)			NOT INCLUDED	NOT INCLUDED
TOTAL HEIGHT INCLUDING ANY ALLOWABLE INCREASE	18 FEET	1	60 FT.	3

THE HIGHEST LEVEL IS AN EQUIPMENT PLATFORM. IN ACCORDANCE WITH 505.5 THIS EQUIPMENT PLATFORM SHALL NOT CONTRIBUTE TO THE BUILDING AREA OR THE NUMBER OF STORIES

TABLE 5-6 BUILDING DESIGN OCCUPANT LOAD:

OCCUPANCY TYPE	ROOM OR SPACE (COLUMN IDENTIFICATION:)	A: OCCUPANCY FLOOR AREA (NET UNLESS INDICATED GSF)	B: FLOOR AREA IN SF/OCCUPANT (NET UNLESS INDICATED GSF)	C: DESIGN OCCUPANT LOAD
FIRST FLOOR				
BUSINESS (B)				
	BROADCAST STUDIO	576 GSF	1/100 GSF	6
	OFFICE/GREEN ROOM	139 GSF	1/100 GSF	2
	STORAGE/ELECTRICAL	194	1/300	1
			1st FLOOR	9
PENTHOUSE				
MECHANICAL				
	PENTHOUSE	303	UNOCCUPIED	0
			PENTHOUSE	0

TOTAL BUILDING DESIGN OCCUPANT LOAD 9 People

TABLE 5-7 GENERAL FIRE PROTECTION

ITEM	YES	NO	COMMENTS
SEPERATIONS			
IS FIREBLOCKING REQUIRED? (PER IBC SECTION 717)		X	NON-COMBUSTIBLE CONSTRUCTION
IS DRAFTSTOPPING REQUIRED? (PER IBC SECTION 717)		X	NON-COMBUSTIBLE CONSTRUCTION
SMOKE CONTROL SYSTEMS REQUIRED? (PER IBC SECTIONS 909)		X	
ARE SMOKE BARRIERS REQUIRED? (PER IBC SECTIONS 407 AND 408)		X	
ARE SMOKE PARTITIONS REQUIRED? (PER IBC SECTIONS 407)		X	
FIRE PARTITIONS REQUIRED? (PER IBC SECTIONS 420)		X	
FIRE BARRIER REQUIRED? (PER IBC SECTIONS 707)		X	
ALARM & DETECTION			
IS THE FIRE ALARM SYSTEM REQUIRED? (PER IFC SECTION 907)	X		
EMERGENCY ALARM SYSTEM REQUIRED? (PER IFC SECTION 907)		X	
SUPPRESSION			
ARE STANDPIPES REQUIRED? (PER IFC SECTION 905)		X	
ARE SPRINKLERS REQUIRED? (PER IFC SECTION 903) (903.2.1.3 GROUP A-3)		X	
ARE PORTABLE EXTINGUISHERS REQUIRED? (PER IFC SECTION 906)	X		
OTHER SUPPRESSION SYSTEMS REQUIRED? (PER IFC SECTION 904)		X	
SMOKE AND HEAT VENTS REQUIRED? (PER IFC SECTION 910)		X	

TABLE 5-8 FIRE RESISTANCE RATING OF BUILDING ELEMENTS

BUILDING ELEMENT	RATING AS DESIGNED (IN HOURS)	RATING AS REQUIRED (IN HOURS)	TESTING AGENCY & DESIGN NUMBER (UL, FM, ETC.)
STRUCTURAL FRAME INCLUDING COLUMNS, GIRDERS AND TRUSSES (PER IBC TABLE 601)	0	0	N/A
BEARING WALLS, EXTERIOR (PER IBC TABLE 601)	0	0	N/A
BEARING WALLS, INTERIOR (PER IBC TABLE 601)	0	0	N/A
NONBEARING WALLS & PARTITIONS, EXTERIOR (PER IBC TABLE 601 AND 602)	0	0	N/A
NONBEARING WALLS & PARTITIONS, INTERIOR (PER IBC SECTION 602)	0	0	N/A
FLOOR CONSTRUCTION, INCLUDING SUPPORTING BEAMS & JOISTS (PER IBC TABLE 601)	0	0	N/A
ROOF CONSTRUCTION, INCLUDING SUPPORTING BEAMS & JOISTS (PER IBC TABLE 601)	0	0	N/A
FIRE WALLS (PER IBC SECTION 706)	N/A	N/A	N/A
FIRE BARRIERS (PER IBC SECTION 707)	N/A	N/A	N/A
SHAFT ENCLOSURES (PER IBC SECTION 708)	N/A	N/A	N/A
FIRE PARTITIONS (PER IBC SECTION 709)	N/A	N/A	N/A
CORRIDORS (PER IBC SECTION 1018)	0	0	N/A - 1018.1.4 EXCEPTION
OPENING/PROTECTIVES (PER IBC SECTION 715)	3/4 HR 1 HR EXIT STAIR	3/4 HR 1 HR EXIT STAIR	

TABLE 5-10 PLUMBING INFORMATION:

B - BUSINESS — REQ'D. DESIGN POPULATION: 9

BASIS OF DESIGN: 5 MALES + 5 FEMALES	WATER CLOSETS (1:25 First 50 + 1:50 Rem. exceding 50)	URINALS (50% of WC IPC 419.2)	LAVATORIES (1:40 First 80 + 1:80 Rem. exceding 80)	DRINKING FOUNTAINS (1:100)	SERVICE SINK
PROVIDED FIXTURES-UNISEX	1	0	1	1	1
TOTAL FIXTURES REQUIRED	1	0	1	1	1
TOTAL FIXTURES PROVIDED	1	0	1	1	1

Table 5-10 PLUMBING INFORMATION CONT'D

WATER SYSTEM
Service Line Size 1 Inches
Peak 16.5 GPM
Total Demand 13.25 No. Fixture Units

SANITARY SEWER SYSTEM
Loading 25 GPD/person
Service Line Size 4 Inches
Slope 1/8 min inches/ft

TABLE 5-15 STATEMENT OF SPECIAL INSPECTIONS

REFER SPECIFICATION SECTION 014100 SPECIAL INSPECTIONS AND TESTING OF THE PROJECT MANUAL

TABLE 5-9 STRUCTURAL DESIGN INFORMATION

RISK CATEGORY(IES) II IBC Table 1604.5

LIVE LOADS
Floor Live Load fu= 50 PSF MEZZANINE List the Fu for each occupancy
Roof Live Load Ru= 20 PSF
Ground Snow Load pg= 10 PSF IBC (Figure 1608.2)

WIND LOADS
Analysis Procedure DIRECTIONAL PROCEDURE ASCE 7
Basic Wind Speed V3S = 115 MPH IBC Fig 1609A
Exposure Category B
Internal Pressure Coefficient GCpi = +/-0.18 ASCE 7
External Pressure Coefficient GCp = WINDWARD +0.8, LEEWARD -0.5 ASCE 7

SEISMIC LOADS
Seismic Importance Factor I = 1.00 ASCE 7
Soil Class C ASCE 7
Mapped Spectral Response Accelerations Ss = 0.419 S1= 0.143
Design Spectral Response Acceleration Parameters SDS = 0.335 SD1 = 0.158
Seismic Design Category C IBC Tables 1613.5.6(1) & 1613.5.6(2)
Basic Seismic Force Resisting System STEEL SYSTEMS NOT SPECIFICALLY DETAILED FOR SEISMIC RESISTANCE
Design Base Shear 5.9 KIPS
Seismic Response Coefficient(s) Cs = 0.112 ASCE 7
Response Modification Factor(s)R = 3.0 ASCE 7
Analysis Procedure EQUIVALENT LATERAL FORCE PROCEDURE

ARCHITECTURAL-MECHANICAL-ETC. LOADS Provide as applicable: architectural items, mechanical, plumbing, etc. per ASCE 7

SPECIAL LOADS Provide as applicable: abnormal items, moving loads, impact, hoisting, etc. per ASCE)

*per IBC Chapter 16 and ASCE 7 -- Information may be shown on initial Structural Sheet of the drawings or on Sheet with other code information. List floor design loads on structural plans.

TABLE 5-12 MECHANICAL INFORMATION

AIR COMFORT SYSTEMS
Overall Thermal Transfer Value (OTTV) : ROOF = 6.31 WALL = 19.82
Building Heating Load 34.3 BTU / SF
Building Cooling Load 237 SF / TON

OTHER LOADING FEATURES
Glass U Factor 0.27 Window to wall ratio 30.4%
Insulation Values Roof R28 Exterior Walls 0%

Outside Air minimum while occupied 200 CFM Occupants 9

MECHANCIAL SYSTEMS, SERVICE SYSTEMS & EQUIPMENT
Briefly describe mechanical system:
SPLIT SYSTEM HEAT PUMP

TABLE 5-13 ELECTRICAL INFORMATION

SERVICE TRANSFORMER ☐ By Utility Co. ☒ By Agency (if by Agency) 300 KVA Primary 8320/3 Voltage/Phase

THIS BUILDING IS BEING SUB-FED OUT OF MAIN SCHOOL OF JOURNALISM BUILDING: EXISTING SERVICE TRANSFORMER FEEDING THAT BUILDING.

ELECTRICALSERVICE INFORMATION
Service Voltage/Phase 208/3 Amperes 400
Service Entrance Conductors Size 500kCMil Quantity per Phase 4
Total Connected Load 100 KVA
Estimated Maximum Demand 50 KVA
Available Fault Current in Symmetrical Amperes –
Interrupting Capacity of Service Overcurrent Device 65,000

GROUNDING ELECTRODE SYSTEM COMPONENTS: Grounding Rods, Building Steel, Water Pipes, and Concrete Encased Electrodes (NEC 250)

EMERGENCY SERVICE INFORMATION
EmergencyGenerator ☒ No ☐ Yes – KVA Voltage/Phase – – Fuel
Exit/Emergency Lights Backup Power ☒ Integral Battery ☐ Generator
Fire Alarm System ☒ Manual ☐ Automatic ☒ Addressable ☐ Class A ☒ Class B

LIGHTNING PROTECTION PROVIDED ☒ No ☐ Yes

COMMUNICATIONS COORDINATED Contact DSIT Network/Infrastructure Planning for applicability at (803) 896-0001 ☒ Not Required ☐Yes

INDEX OF DRAWINGS

T1.1 LOCATION MAPS AND CODE ANALYSIS, INDEX OF DRAWINGS

CIVIL

C1.0 EXISTING CONDITIONS PLAN
C1.1 SECURITY FENCING/LIMITS OF CONSTRUCTION/LAYDOWN AREA
C1.2 EXISTING CONDITIONS AND DEMOLITION PLANS
C2.0 STAKING PLAN
C3.0 OVERALL GRADING AND UTILITIES PLAN
C3.1 GRADING AND UTILITIES PLAN
C4.0 SEDIMENTATION AND EROSION CONTROL PLAN, NOTES AND DETAILS
C5.0 DETAILS

LANDSCAPE

L.0 TREE PROTECTION PLAN
L.1 PLANTING PLAN
I.1 IRRIGATION PLAN

ARCHITECTURAL

DAS1.1 DEMOLITION SITE PLAN
AS1.1 ARCHITECTURAL SITE PLAN
AS1.2 FENCE ELEVATIONS
AS1.3 FENCE ELEVATIONS AND DETAILS
A1.1 FLOOR PLANS, REFLECTED CEILING PLAN, AND ROOF PLAN AND DETAILS
A2.1 GFRC (GLASS FIBER REINFORCED CONCRETE) DETAILS
A3.1 ENLARGED FLOOR PLANS, PARTITION TYPES, AND MISC. DETAILS
A4.1 EXTERIOR ELEVATIONS
A5.1 BUILDING SECTIONS
A6.1 TYPICAL WALL SECTIONS AND DETAILS
A6.2 TYPICAL WALL SECTIONS AND DETAILS
A6.3 TYPICAL WALL SECTIONS AND DETAILS
A7.1 DOOR SCHEDULE, FRAMES AND TYPES, WINDOW FRAMES
A7.2 DOOR AND WINDOW DETAILS
A7.3 WINDOW DETAILS
A8.1 ROOM FINISH SCHEDULE, INTERIOR CASEWORK, AND INTERIOR ELEVATIONS

LIFE SAFETY

AX1.1 LIFE SAFETY PLAN

STRUCTURAL

S1.1 FOUNDATION AND ROOF FRAMING PLANS
S2.1 STRUCTURAL DETAILS
S2.2 STRUCTURAL DETAILS
S2.3 STRUCTURAL DETAILS
S2.4 STRUCTURAL DETAILS

MECHANICAL

MSD1.1 MECHANICAL DEMOLITION SITE PLAN
MS1.1 MECHANICAL SITE PLAN
M1.1 FLOOR PLAN, DETAILS, NOTES, SCHEDULES, AND LEGEND

PLUMBING

P1.1 FLOOR PLANS, DETAILS, NOTES, SCHEDULE, AND LEGEND

ELECTRICAL

E0.1 ELECTRICAL SYMBOL LEGEND & SCHEDULES
E0.2 ELECTRICAL SITE PLANS
E1.1 LIGHTING PLAN
E1.2 POWER PLAN
E1.3 SYSTEMS PLAN

AV SYSTEMS

EAV000 AV INFRASTRUCTURE REFERENCE
EAV101 FIRST FLOOR AV INFRASTRUCTURE PLAN
EAV201 FIRST FLOOR AV INFRASTRUCTURE RCP

The asbestos and lead paint floor plan abatement drawings have been produced by F&ME Consultants. F&ME has produced these documents directly for USC, hired by and as a consultant to USC. F&ME is not a consultant to The Boudreaux Group nor has a contractual relationship with The Boudreaux Group for the work in the drawings listed below. As such, The Boudreaux Group does not take responsibility for or liability for the work described in these documents. These documents are ONLY being bound with the Project Drawings for the Bidder's convenience upon USC's request.

HAZARDOUS MATERIALS ABATEMENT

AB-1 ASBESTOS ABATEMENT PLAN

The Boudreaux Group
The Boudreaux Group, Inc.
1330 Lady St., Suite 500 (29201)
P.O. Box 5695
Columbia, SC 29250
803 799 0247 p
803 771 6844 f
info@boudreauxgroup.com
Interdisciplinary Design Architecture Interiors Planning

A/E Seal

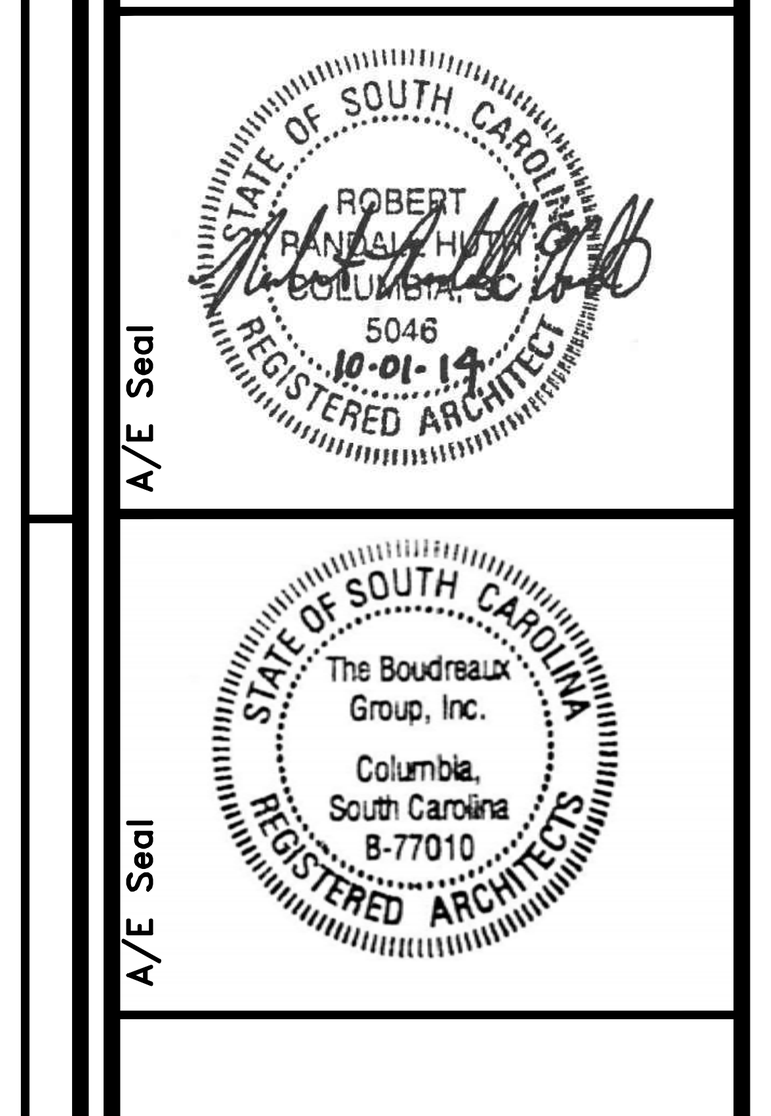

A/E Seal

Project Title: UNIVERSITY OF SOUTH CAROLINA SCHOOL OF JOURNALISM BROADCAST STUDIO
BID DOCUMENTS
COLUMBIA, SOUTH CAROLINA

Project No. U-646-12-3
Drawn By
Checked By
Date 10.31.14

Revisions: No. | Name | Date

This drawing and the design thereon are the property of The Boudreaux Group, Inc. The reproduction, copying, or use of this drawing without the written consent of The Boudreaux Group, Inc. is prohibited and any infringement will be subject to legal action. Copyright © 2001 The Boudreaux Group

Drawing Title: LOCATION MAPS AND CODE ANALYSIS, INDEX OF DRAWINGS

Drawing No. T1.1

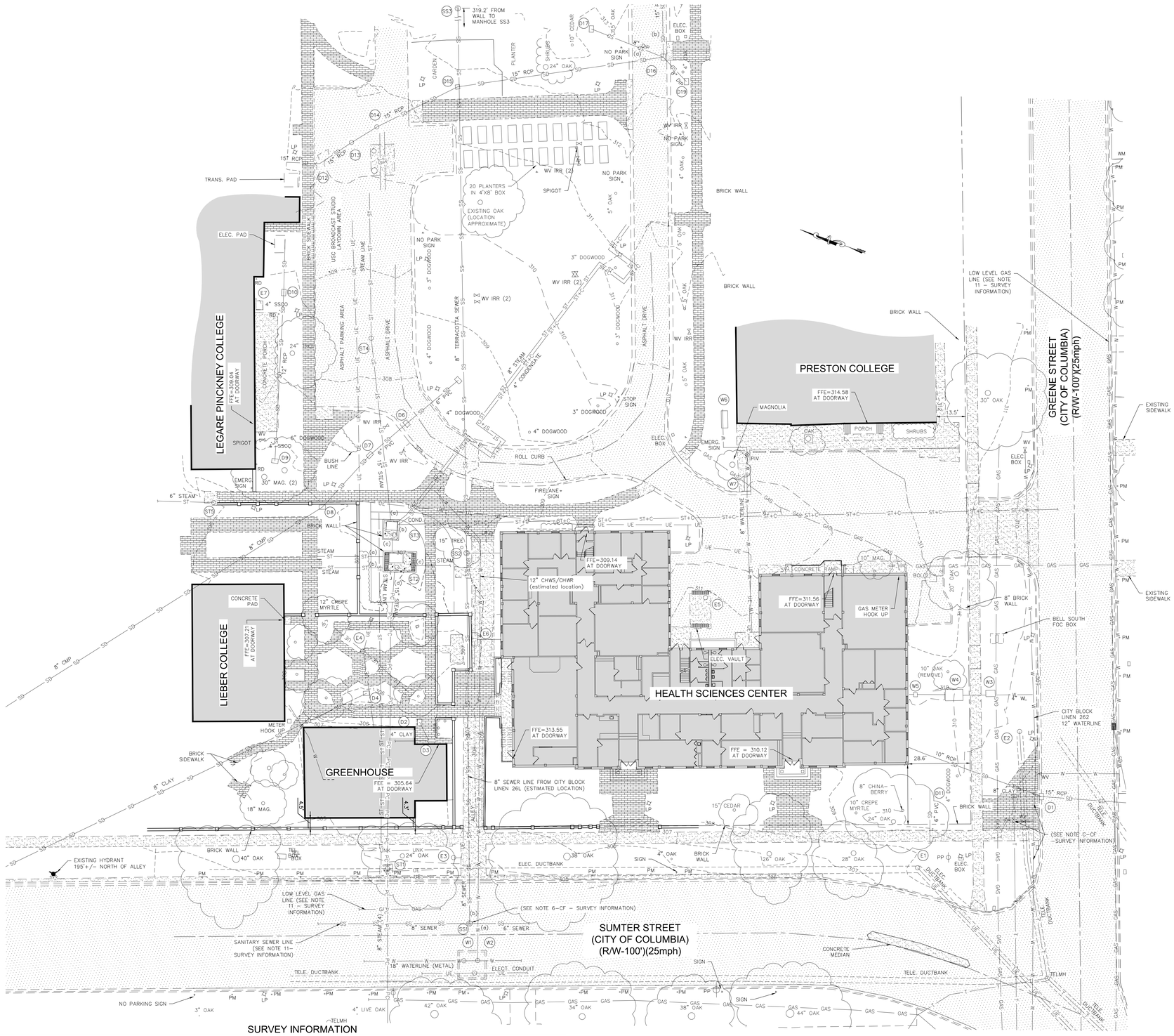



VICINITY MAP
SCALE: 1"=1000'

LEGEND (CIVIL)

EXISTING	DESCRIPTION
	RIGHT OF WAY
	CURB AND GUTTER
	BITUMINOUS SURFACE
	CONCRETE SURFACE
	BRICK PAVER
310	CONTOURS
+ 309.60	SPOT GRADE ELEVATION
	BUILDING
SS	STORM DRAIN LINE w/STRUCTURE
SS	SANITARY SEWER LINE w/MANHOLE
	FIRE HYDRANT
WV	WATER LINE
	WATER VALVE
	WATER METER
	WATER SPIGOT
UE	UNDERGROUND ELECTRIC
UE	LIGHT POLE w/UNDERGROUND ELECTRIC
OHE	OVERHEAD ELECTRIC w/POLE
T	TELEPHONE LINE
	TREE
	FENCE
PM	PARKING METER
GAS	NATURAL GAS LINE
ST	STEAM
ST+C	CONDENSATE

GENERAL NOTES

1. SURVEY INFORMATION PROVIDED BY AMERICAN ENGINEERING CONSULTANTS, INC., DATE 07/15/09.
   a. CONTOUR INTERVAL: 1 FOOT
   b. DATUM: NAD 83
2. PROPERTY INFORMATION
   TMS# 11304–05–01
   OWNER: UNIVERSITY OF SOUTH CAROLINA
   DEVELOPMENT ADDRESS: SUMTER STREET
   CONTACT: ANN DERRICK
   PHONE NO.: 803–960–1277
   FAX NO.: 803–777–8739
   TOTAL ACREAGE: .30 ACRE
   DISTURBED AREA: .29 ACRES
3. ACCORDING TO FEMA FLOOD INSURANCE RATE MAP 45079C 0094H, DATED 02/20/02, THIS PROPERTY IS LOCATED IN FLOOD ZONE "X."
4. ZONING INFORMATION
   ZONED: C–1 (OFFICE & INSTITUTIONAL)
   SETBACK (FRONT): ZERO
   SETBACK (REAR): ZERO
   SETBACK (SIDE): ZERO

LEGEND

BOL	= BOLLARD
CB	= CATCH BASIN
ELMH	= ELECTRICAL MANHOLE
ELEC BOX	= ELECTRICAL BOX
FDC	= FIRE DEPARTMENT CONNECTION
FH	= FIRE HYDRANT
GV	= GAS VALVE
LP	= LIGHT POLE
PP	= POWER POLE
PM	= PARKING METER
SDMH	= STORM DRAIN MANHOLE
SSCO	= SANITARY SEWER CLEANOUT
SSMH	= SANITARY SEWER MANHOLE
STMH	= STEAM MANHOLE
TEL BOX	= TELEPHONE BOX
TELJB	= TELEPHONE JUNCTION BOX
TLMH	= TELEPHONE MANHOLE
TPED	= TELEPHONE PEDESTAL
WM	= WATER METER
WM IRR	= WATER METER IRRIGATION
WMV IRR	= WATER METER IRRIGATION VALVE
WV	= WATER VALVE
WV BOX	= WATER VALVE BOX
WV IRR	= WATER VALVE IRRIGATION
RD	= ROOF DRAIN

UTILITIES LEGEND

ST	= LOCATED BY: PUPS OR USC UTILITIES (STEAM LINE)
W	= LOCATED BY: PUPS OR USC UTILITIES (WATER LINE)
SS	= LOCATED BY: PUPS OR USC UTILITIES (SANITARY SEWER LINE)
T	= LOCATED BY: PUPS OR USC UTILITIES (TELEPHONE LINE)
UNK	= LOCATED BY: PUPS OR USC UTILITIES (UNKNOWN LINE)
UE	= LOCATED BY: PUPS OR USC UTILITIES (ELECTRICAL LINE)
SD	= LOCATED BY: PUPS OR USC UTILITIES (STORM DRAINAGE LINE)
ST	= LOCATED BY: SUBSURFACE UTILITY ENGINEERING (STEAM LINE)
W	= LOCATED BY: SUBSURFACE UTILITY ENGINEERING (WATER LINE)
SS	= LOCATED BY: SUBSURFACE UTILITY ENGINEERING (SANITARY SEWER LINE)
T	= LOCATED BY: SUBSURFACE UTILITY ENGINEERING (TELEPHONE LINE)
UNK	= LOCATED BY: SUBSURFACE UTILITY ENGINEERING (UNKNOWN LINE)
UE	= LOCATED BY: SUBSURFACE UTILITY ENGINEERING (ELECTRICAL LINE)
SD	= LOCATED BY: SUBSURFACE UTILITY ENGINEERING (STORM DRAINAGE LINE)

LEGEND

= ASPHALT PARKING LOT

= CONCRETE/CONCRETE SIDEWALK

= BRICK SIDEWALK/BRICK CROSSWALK

CITY FILES REFERENCES:
1–CF, 103–25
2–CF, 222–11
3–CF, 222–11
4–CF, C.F. 12–101
5–CF, C.F. 13–115
6–CF, CITY BLOCK LINEN 26L
7–CF, W.I. BK. 1–390
8–CF, W.I. LINEN 1988
9–CF, W.I. LINEN 198C

10. THESE SECTIONS OF SUMTER ST. AND GREENE ST. ARE NOT STATE MAINTAINED ROADS PER SCDOT. CITY OF COLUMBIA DETERMINED THE R/W OF SUMTER ST. IS 100' AND GREENE ST. IS 100'. CITY OF COLUMBIA INFORMATION OBTAINED VIA RICHLAND COUNTY TAX MAP BOOK, LAST REVISED MARCH 1954.

11. UTILITY LINE NOT LOCATED BY SUE BUT SHOWN ON USC MASTER UTILITY DRAWING.

UTILITY STRUCTURE TABLE

IDEN	TYPE	RIM/GRATE	TOP OF PIPE	BOTTOM OF BOX
E1	ELEC MH	308.39	––	299.79
E2	ELEC MH	308.50	––	299.03
E3	ELEC MH	308.32	299.52	298.62
E4	ELEC MH	308.36	––	298.06
E5	ELEC MH	311.10	––	296.93
E6	TELEPHONE BOX	307.66	––	306.26
E7	ELEC. BOX	309.01	––	306.71
ST1	STEAM MH	305.14	302.84	301.04
ST2	STEAM VAULT	306.82	(a) 305.12	297.88
		(MH) 306.88	(b) 305.12	
			(c) 301.62	
ST3	STEAM VAULT	306.92	(a) 304.52	301.72
		(MH) 306.92	(b) 304.52	
			(c) 302.82	
ST4	STEAM MH	308.33	300.93	300.63
ST5	STEAM MH	305.95	300.65	
W1	WATER MH	304.88	298.28	293.98
W2	WATER MH	304.96	298.06	294.06
W3	METER PIT	310.42	307.82	307.22
W4	WATER VAULT	310.00	308.30	307.30
W5	VALVE BOX	310.09	308.99	––
W6	WATER VAULT	310.11	307.41	306.21
W7	WATER VAULT	310.03	307.43	306.53

STORM DRAIN & SEWER STRUCTURE TABLE

IDEN	TYPE	RIM/GRATE	INV. IN.	INV. OUT
D1	GRATE	308.48	306.88	306.38
D2	GRATE	305.63	––	304.20
D3	GRATE	305.40	304.20	304.20
D4	GRATE	305.80	––	304.60
D5	GRATE	308.13	––	306.43
D6	GRATE	307.95	306.00	305.90
D7	GRATE	307.35	306.50	306.40
D8	GRATE	306.72	305.42	305.32
D9	GRATE	306.10	––	304.60
D10	GRATE	307.17	303.97	303.87
D11	GRATE	309.65	––	307.35
D12	GRATE	309.86	307.26	307.06
D13	JB	310.28	307.48	307.43
D14	JB	310.63	307.88	307.68
D15	GRATE	311.20	308.60	308.55
D16	GRATE	312.20	(a) 310.10	310.00
			(b) 310.30	
D17	GRATE	312.60	––	311.00
D18	GRATE	312.58	310.78	310.68
D19	GRATE	312.36	310.66	310.26
SS1	SEWER MH	305.24	(a) 298.04	297.44
			(b) 297.74	
SS2	SEWER MH	307.87	(both) 301.77	301.67
SS3	SEWER MH	320.40	312.90, 314.60, 315.15	312.90

The Palmetto Utility Protection Service, Inc.
811 South Square Blvd, Suite 220 Columbia, South Carolina 29210 (803) 935-1117

South Carolina 811 Call 811 Before you Dig

3 DAYS BEFORE DIGGING IN SOUTH CAROLINA
CALL 811
CONTRACTOR SHALL CONTACT THE UNDERGROUND LOCATORS EVERY 10 DAYS FOR AN UPDATE TO UTILITY LOCATIONS.

GRAPHIC SCALE
20 0 10 20 40 80
(IN FEET)
1 inch = 20 ft.

RB TODD CONSULTING ENGINEERS
7436 Broad River Road, Suite 212
Irmo, SC 29063
Tel. 803.781.3141
Fax. 803.781.3142
www.rbtodd.com

The Boudreaux Group
The Boudreaux Group, Inc.
1230 Lady St., Suite 300 (29201)
P.O. Box 8566
Columbia, SC 29250
803 799 0247 P
803 771 8844 F
info@boudreauxgroup.com
Interdisciplinary Design Architecture Interiors Planning

SOUTH CAROLINA PROFESSIONAL ENGINEER
RB TODD & ASSOCIATES, INC.
NO. C03047
CERTIFICATE OF AUTHORIZATION
A/E Seal

SOUTH CAROLINA PROFESSIONAL ENGINEER
NO. 11570
ROBERT BRUCE TODD
A/E Seal
10/01/14

Project Title
UNIVERSITY OF SOUTH CAROLINA
SCHOOL OF JOURNALISM
BROADCAST STUDIO
CONSTRUCTION DOCUMENTS
COLUMBIA, SOUTH CAROLINA

Project No.
U–1646–12–3
Drawn By
Checked By
Date
10.01.14

The drawing and the design thereof are the property of RB Todd & Associates, Inc. The reproduction, copying, or other use of this drawing without the written consent of The Boudreaux Group is prohibited and any infringement will be subject to legal prosecution by The Boudreaux Group.

Revisions
No. Name Date

Drawing Title
EXISTING CONDITIONS PLAN

Drawing No.
C1.0

Oct 22, 2014 – 1:53pm S:\Projects\13224 USC Broadcast Studio\Drawings\Civil\141008\13224 USC Broadcast Studio.dwg

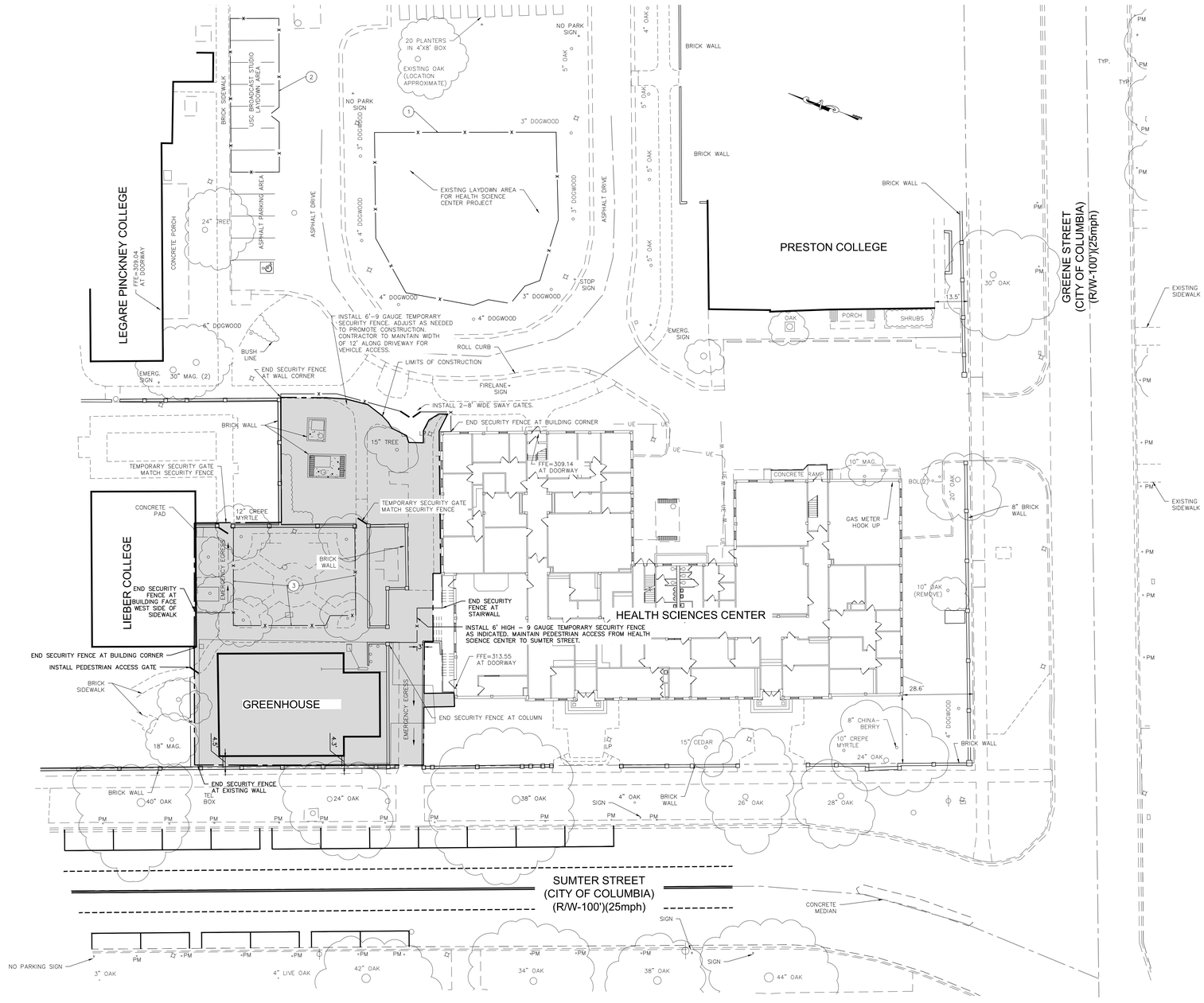

GENERAL NOTES

1. EMERGENCY EXITS FROM ALL CAMPUS BUILDINGS MUST BE MAINTAINED WITH APPROPRIATE SIGNAGE. EMERGENCY EXITS MUST NEVER BE BLOCKED. A CLEAR EXIT PATHWAY MUST BE MAINTAINED AT ALL TIMES FROM EVERY EXIT DOOR DURING CONSTRUCTION. IF IT IS ABSOLUTELY NECESSARY TO BLOCK THESE AREAS IN ORDER TO DO SPECIFIC WORK, THE WORK MUST BE PERFORMED BEFORE OR AFTER NORMAL WORKING HOURS. IN ADDITION, STAFF A PERSON AT EACH OF THESE AREAS FOR THE SPECIFIC PURPOSE OF DIRECTING TRAFFIC.
2. ALL EXISTING SECURITY AND FIRE ALARM SYSTEMS, WATER, SEWER, IRRIGATION LINES, STEAM PIPING, SPEAKER, ELECTRICAL, CABLE, AND DATA WIRING THAT FEED OTHER FACILITIES OUTSIDE OF THIS PROJECT MUST BE MAINTAINED AT ALL TIMES. IF DAMAGED, IT MUST BE REPAIRED AND MADE OPERATIONAL BEFORE LEAVING FOR THE DAY. INFORM OWNER'S REPRESENTATIVE A MINIMUM OF 5 DAYS IN ADVANCE OF ANY KNOWN PERIODS WHERE SYSTEMS WILL BE INOPERABLE. ALL KNOWN DISRUPTIONS ARE TO BE SCHEDULED FOR TIMES BEFORE OR AFTER NORMAL WORKING HOURS.
3. PROVIDE ACCURATE SIGNAGE TO DIRECT AND INFORM PEDESTRIAN TRAFFIC AT ALL TIMES.
4. PEDESTRIAN TRAFFIC SHALL BE PROTECTED BY A DIRECTIONAL BARRICADE. WHERE THE PEDESTRIAN WALKWAY EXTENDS INTO THE STREET, THE DIRECTIONAL BARRICADE SHALL BE OF SUFFICIENT SIZE AND CONSTRUCTION TO DIRECT VEHICULAR TRAFFIC AWAY FROM THE PEDESTRIAN PATH.
5. COMPLY WITH ALL CONSTRUCTION SAFEGUARD REQUIREMENTS OF IBC 2009, CHAPTER 33, LOCAL AHJ, AND SC OSE FOR THE ENTIRE DURATION OF THE PROJECT.

KEY NOTES

1. EXISTING FENCED LAYDOWN AREA USED FOR HEALTH SCIENCE CENTER RENOVATION. CONTRACTOR TO SHARE THIS SPACE.
2. INSTALL 6'-9 GAUGE TEMPORARY SECURITY FENCE AS INDICATED (7PARKING SPACES) WITH PRIVACY SCREEN FABRIC (SEE SPECIFICATION SECTION 015000 FOR DETAILS). SET FENCE 12" FROM PARKING SPACES TO REMAIN. KEEP ADJACENT SPACES OPEN FOR USE. INSTALL FENCE SIX INCHES FROM EDGE OF BRICK SIDEWALK. PROVIDE 2-8' SWING GATES.
3. INSTALL 6'-9 GAUGE TEMPORARY SECURITY FENCE ALONG INTERIOR EDGE OF EXISTING SIDEWALK PAVERS. ADJUST LOCATION AS NEEDED TO PROMOTE CONSTRUCTION.

LEGEND (CIVIL)

NEW	DESCRIPTION
x	SECURITY FENCE
	LIMITS OF CONSTRUCTION
x	TREE PROTECTION FENCE

GRAPHIC SCALE

20 0 10 20 40 80

(IN FEET)
1 inch = 20 ft.

RB TODD CONSULTING ENGINEERS
7436 Broad River Road, Suite 212
Irmo, SC 29063
Tel. 803.781.3141
Fax. 803.781.3142
www.rbtodd.com

The Boudreaux Group
The Boudreaux Group, Inc.
1230 Lady St., Suite 300 (29201)
P.O. Box 7566
Columbia, SC 29250
803 799 0347 P
803 771 4844 F
info@boudreauxgroup.com
Interdisciplinary Design Architecture Interiors Planning

A/E Seal

SOUTH CAROLINA
RB TODD & ASSOCIATES, INC.
NO. CO3047
CERTIFICATE OF AUTHORIZATION

A/E Seal

SOUTH CAROLINA
REGISTERED PROFESSIONAL ENGINEER
NO. 19260
ROBERT BRUCE TODD

10/01/14

Project Title
UNIVERSITY OF SOUTH CAROLINA
SCHOOL OF JOURNALISM
BROADCAST STUDIO

CONSTRUCTION DOCUMENTS

COLUMBIA, SOUTH CAROLINA

Revisions		
No.	Name	Date

Project No.
U-646-12-3
Drawn By
Checked By
Date
10.01.14

This drawing and the design thereon are the property of The Boudreaux Group, Inc. The reproduction, copying, or other use of this drawing without the written consent of The Boudreaux Group, Inc. is prohibited. Unauthorized use is subject to legal action by The Boudreaux Group.

Drawing Title
SECURITY FENCING / LIMITS OF CONSTRUCTION / LAYDOWN AREA

Drawing No.
C1.1

Oct 07, 2014 - 10:11am S:\Projects\13224 USC Broadcast Studio\Drawings\Civil\141006\13224 USC Broadcast Studio.dwg

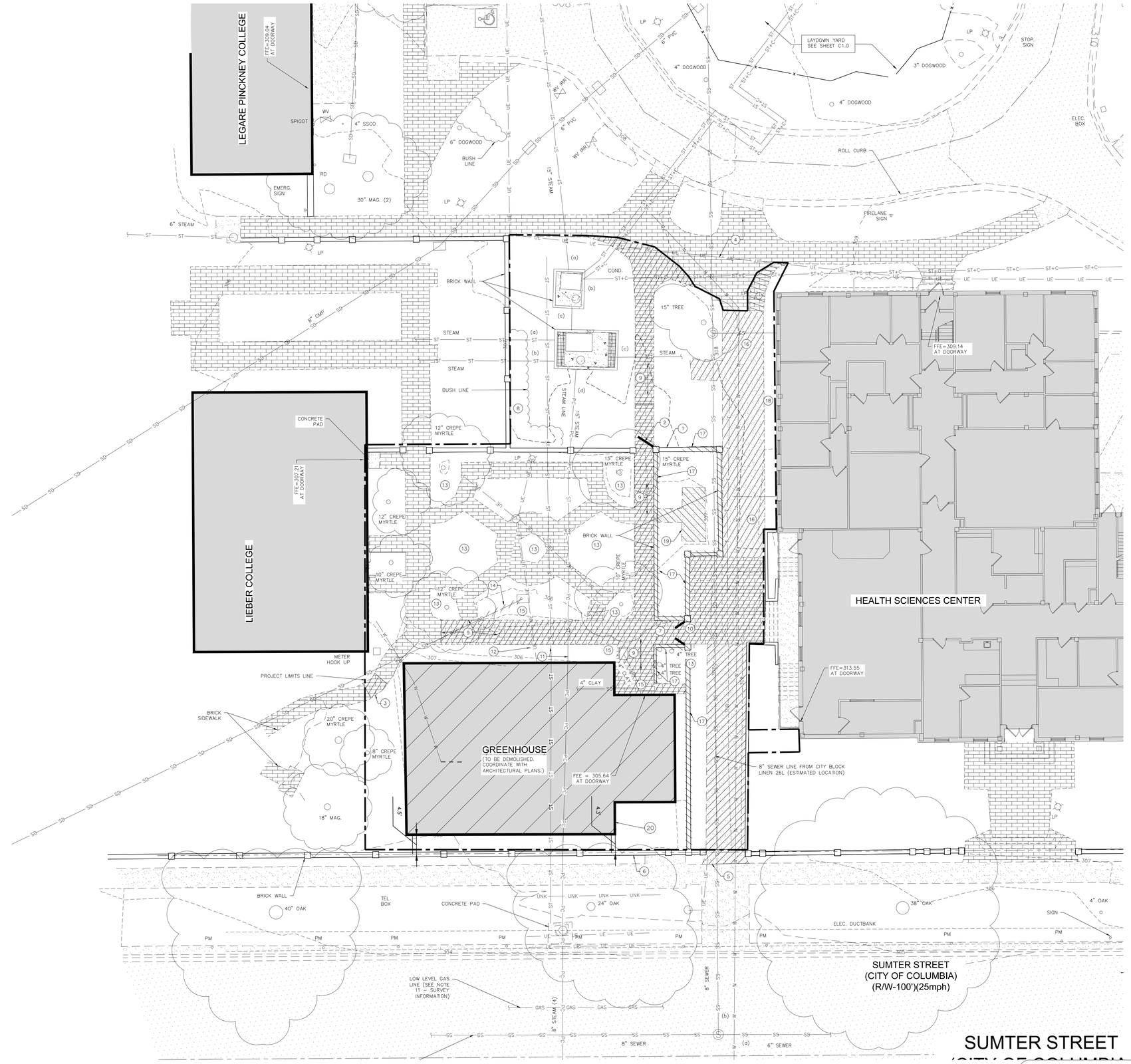

LEGEND (CIVIL)

DEMOLITION	EXISTING	DESCRIPTION
N/A		RIGHT OF WAY
		CURB AND GUTTER
		BITUMINOUS SURFACE
		CONCRETE SURFACE
		BRICK PAVER
N/A	310	CONTOURS
N/A	+ (309.60)	SPOT GRADE ELEVATION
		BUILDING
N/A	SD	STORM DRAIN LINE w/STRUCTURE
N/A	SS	SANITARY SEWER LINE w/MANHOLE
N/A	W	FIRE HYDRANT
	W	WATER LINE
N/A	WV	WATER VALVE
N/A	W	WATER METER
N/A		WATER SPIGOT
	UE	UNDERGROUND ELECTRIC
N/A	UE	LIGHT POLE w/UNDERGROUND ELECTRIC
N/A	OHE	OVERHEAD ELECTRIC w/POLE
N/A	T	TELEPHONE LINE
N/A		TREE
N/A	x	FENCE
N/A	PM	PARKING METER
N/A	GAS	NATURAL GAS LINE
N/A	ST	STEAM
N/A	ST+C	CONDENSATE
N/A	1	KEY NOTE
N/A		PROJECT LIMITS
		BRICK WALL
N/A	D2	DRAINAGE STRUCTURE
N/A	ST1	STEAM STRUCTURE

GENERAL NOTES

1. SURVEY INFORMATION PROVIDED BY AMERICAN ENGINEERING CONSULTANTS, INC., DATE 07/15/09.
   a. CONTOUR INTERVAL: 1 FOOT
   b. DATUM: NAD 83
2. PROPERTY INFORMATION
   TMS# 11304-05-01
   OWNER: UNIVERSITY OF SOUTH CAROLINA
   DEVELOPMENT ADDRESS: SUMTER STREET
   CONTACT: ANN DERRICK
   PHONE NO.: 803-960-1277
   FAX NO.: 803-777-8739
   TOTAL ACREAGE: .30 ACRE
   DISTURBED AREA: .29 ACRES
3. ACCORDING TO FEMA FLOOD INSURANCE RATE MAP 45079C 0094H, DATED 02/20/02, THIS PROPERTY IS LOCATED IN FLOOD ZONE "X."
4. ZONING INFORMATION
   ZONED: C-1 (OFFICE & INSTITUTIONAL)
   SETBACK (FRONT): ZERO
   SETBACK (REAR): ZERO
   SETBACK (SIDE): ZERO
5. SEE SHEET C1.0 FOR SURVEY INFORMATION, UTILITY STRUCTURE TABLE, AND STORM DRAIN & SEWER STRUCTURE TABLE
6. SITE CONTRACTOR TO COORDINATE WITH ARCHITECTURAL SITE PLAN FOR ADDITIONAL INFORMATION ON DEMOLITION ITEMS. INFORMATION ON ARCHITECTURAL SITE PLAN DAS1.1 SHALL GOVERN.

KEY NOTES

1. EXISTING WALLS INDICATED TO BE MODIFIED. COORDINATE WITH ARCHITECTURAL SITE PLANS.
2. REMOVE AND STORE GATE DURING CONSTRUCTION, REPLACE AT END OF CONSTRUCTION. SEE ARCHITECTURAL SITE PLANS FOR ADDITIONAL INFORMATION.
3. REMOVE PAVERS TO ALLOW INSTALLATION OF NEW STORM DRAIN LINE. SEE SHEET C3.0.
4. REMOVE BRICK PAVERS TO ALLOW CONSTRUCTION ACCESS FROM LAYDOWN YARD TO CONSTRUCTION SITE. SALVAGE AND STORE PAVERS ONSITE. REINSTALL AT END OF PROJECT.
5. SAWCUT AND REMOVE SIDEWALK BEGINNING AT PROJECTED EDGE OF SIDEWALK PARALLEL WITH SUMTER STREET.
6. EXISTING BRICK WALL PARALLEL TO SUMTER STREET TO BE PROTECTED DURING CONSTRUCTION.
7. REMOVE EXISTING GATE AND ARCHWAY AND DELIVER MATERIALS TO OWNER.
8. REMOVE BUSHES IN THIS AREA.
9. REMOVE EXISTING PAVERS IN THIS AREA TO PROMOTE CONSTRUCTION OF NEW FACILITY. COORDINATE WITH STAKING PLAN, ARCHITECTURAL SITE PLANS AND LANDSCAPE PLANS. SALVAGE PAVERS FOR RE-INSTALLATION. DELIVER UNUSED PAVERS TO OWNER STACKED ON PALLETS.
10. REMOVE GATE AND DELIVER TO OWNER.
11. SEE MECHANICAL PLANS FOR INFORMATION RELATIVE TO STEAM LINE REMOVAL.
12. SEE ELECTRICAL PLANS FOR INFORMATION ON ELECTRICAL LINE REMOVAL.
13. REMOVE LANDSCAPING IN THIS BED FOR TEMPORARY STORAGE OFF-SITE AT LOCATION INDICATED BY OWNER AND REPLANT AT COMPLETION OF CONSTRUCTION. PROTECT BRICK PAVERS AS MUCH AS POSSIBLE, AND REPAIR ANY BROKEN OR DAMAGED PAVERS AT COMPLETION OF CONSTRUCTION. EXISTING TREES TO REMAIN, CONTRACTOR TO PROVIDE PROTECTION AS NOTED ON LANDSCAPE DRAWINGS.
14. REMOVE EXISTING 8" CLAY LINE AS NEEDED TO PROMOTE CONSTRUCTION OF NEW STORM DRAIN SYSTEM. SEE SHEET C3.1
15. REMOVE EXISTING DRAINAGE STRUCTURE AND ASSOCIATED PIPING.
16. CONCRETE SIDEWALK BETWEEN PAVERS ON EAST AND WEST END HAVE BEEN PREVIOUSLY REMOVED AS PART OF THE HEALTH SCIENCES CENTER RENOVATION PROJECT.
17. COMPLETELY REMOVE EXISTING WALLS AND COLUMNS. SALVAGE BRICK FOR RE-INSTALLATION. DELIVER UNUSED BRICK TO OWNER STACKED ON PALLETS. SEE ARCHITECTURAL SITE PLAN.
18. REMOVE LANDSCAPING IN THIS AREA. COORDINATE WITH LANDSCAPE PLANS.
19. DEMOLISH TRELLIS AND FOUNDATIONS. REMOVE BENCHES AND STORE UNTIL PROJECT COMPLETION FOR REINSTALLATION AS NOTED ON ARCHITECTURAL PLANS.
20. EXISTING SEWER SERVICE LOCATION UNKNOWN. LOCATE SERVICE REMOVE TO PROMOTE CONSTRUCTION AND CAP END OF LINE.

The Palmetto Utility Protection Service, Inc.
810 Dutch Square Blvd, Suite 320 Columbia, South Carolina 29210 (803) 939-1117
South Carolina 811 Call 811 Before you Dig
3 DAYS BEFORE DIGGING IN SOUTH CAROLINA
CALL 811
CONTRACTOR SHALL CONTACT THE UNDERGROUND LOCATORS EVERY 10 DAYS FOR AN UPDATE TO UTILITY LOCATIONS.

GRAPHIC SCALE
10 0 5 10 20 40
(IN FEET)
1 inch = 10 ft.

RB TODD CONSULTING ENGINEERS
7436 Broad River Road, Suite 212
Irmo, SC 29063
Tel. 803.781.3141
Fax. 803.781.3142
www.rbtodd.com

The Boudreaux Group
The Boudreaux Group, Inc.
1230 Lady St., Suite 300 (29201)
P.O. Box 2566
Columbia, SC 29202
803 799 9247 P
803 771 4844 F
info@boudreauxgroup.com
Interdisciplinary Design Architecture Interiors Planning

SOUTH CAROLINA
RB TODD & ASSOCIATES, INC.
NO. C03047
CERTIFICATE OF AUTHORIZATION
A/E Seal

SOUTH CAROLINA
REGISTERED PROFESSIONAL ENGINEER
NO. 15810
ROBERT BRUCE TODD
A/E Seal
10/01/14

Project Title
UNIVERSITY OF SOUTH CAROLINA
SCHOOL OF JOURNALISM
BROADCAST STUDIO
CONSTRUCTION DOCUMENTS
COLUMBIA, SOUTH CAROLINA

Project No. U-646-12-3
Drawn By
Checked By
Date 10.01.14

This drawing and the design thereon are the property of The Boudreaux Group, Inc. The reproduction, copying, or other use of this drawing without the written consent of The Boudreaux Group, Inc. is prohibited and any infringement will be subject to legal prosecution by The Boudreaux Group.

Revisions		
No.	Name	Date

Drawing Title
EXISTING CONDITIONS AND DEMOLITION PLAN

Drawing No.
C1.2

Oct 15, 2014 – 8:07am S:\Projects\13224 USC Broadcast Studio\Drawings\Civil\141006\13224 USC Broadcast Studio.dwg

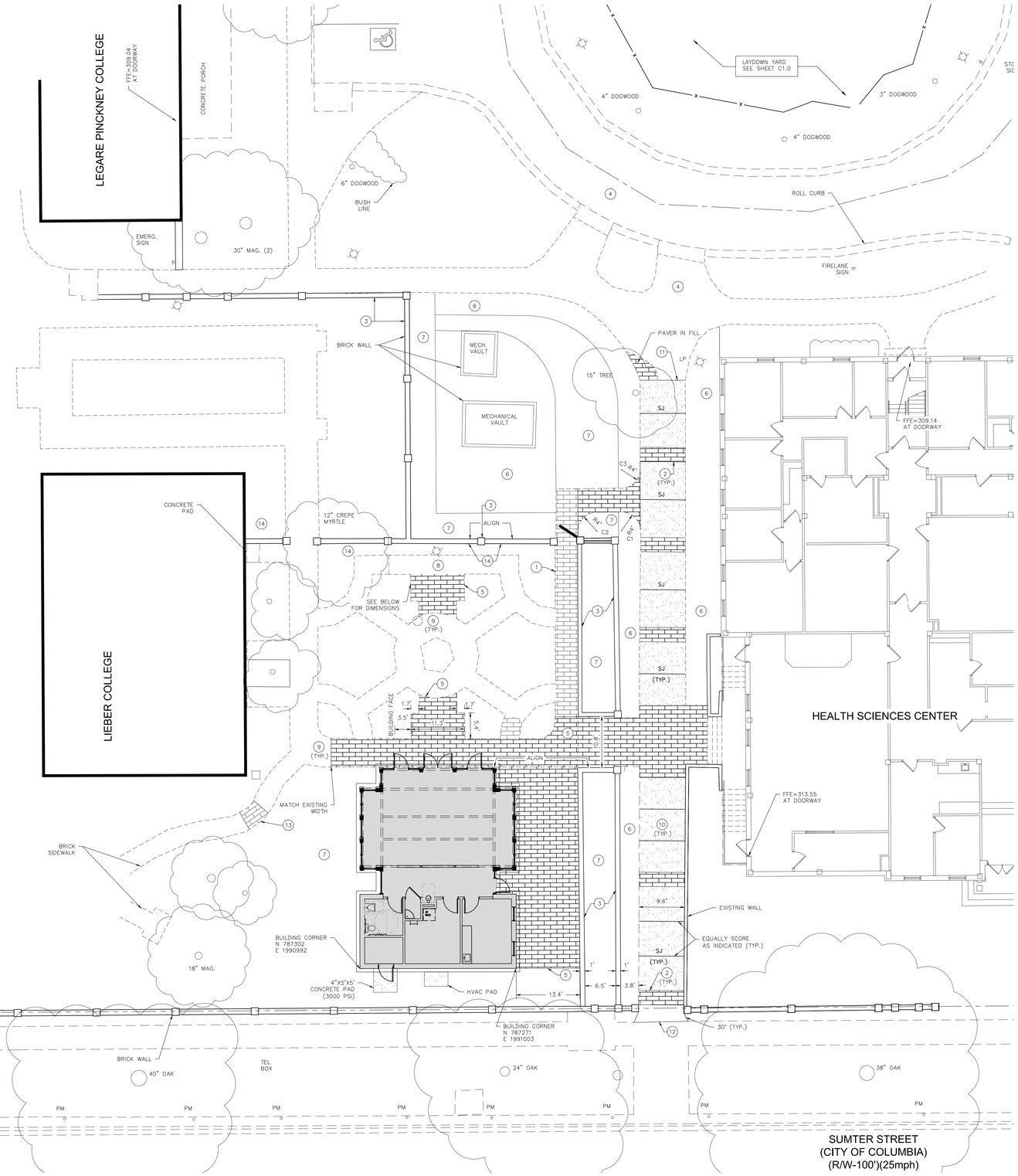



VICINITY MAP
SCALE: 1"=1000'

LEGEND (CIVIL)

NEW	EXISTING	DESCRIPTION
N/A		RIGHT OF WAY
N/A		CURB AND GUTTER
N/A		BITUMINOUS PAVEMENT
		CONCRETE SURFACE
		BRICK PAVERS (NEW)
	N/A	REMOVE AND REPLACE
		BUILDING
N/A	PM	PARKING METER
N/A		LIGHT POLE
N/A	1	KEY NOTE
		BRICK WALL

GENERAL NOTES

1. SEE SHEET C1.0 FOR GENERAL NOTES
2. SEE ARCHITECTURAL SITE PLANS FOR ADDITIONAL INFORMATION ON SITE IMPROVEMENTS. ARCHITECTURAL SITE PLANS SHALL GOVERN.
3. RE-INSTALL PAVERS REMOVED TO PROMOTE CONSTRUCTION. COORDINATE WITH ARCHITECT ON SELECTION OF NEW PAVERS NEEDED TO COMPLETE PROJECT.

KEY NOTES

1. REPLACE PAVERS REMOVED TO PROMOTE CONSTRUCTION. COORDINATE WITH ARCHITECTURAL PLANS.
2. INSTALL PAVER BANDS. COORDINATE WITH ARCHITECTURAL PLANS.
3. SEE ARCHITECTURAL PLANS AND LANDSCAPE PLANS FOR INFORMATION ON NEW WALLS.
4. REPAIR/REPLACE EXISTING ROAD, CURBS, PAVERS, LANDSCAPING, ETC. DAMAGED DURING CONSTRUCTION TO THE SATISFACTION OF THE OWNER.
5. SEE ARCHITECTURAL SITE PLANS FOR INFORMATION ON PAVERS.
6. NEW SODDED AREA. SEE LANDSCAPE PLANS FOR INFORMATION.
7. NEW LANDSCAPING. SEE LANDSCAPE PLANS FOR INFORMATION.
8. NEW TRELLIS IN THIS AREA. SEE ARCHITECTURAL PLANS FOR INFORMATION.
9. TOOTH NEW PAVERS INTO EXISTING PAVERS OR MATCH RUNNING BOND.
10. INSTALL 4"-3000 PSI CONCRETE AS INDICATED BETWEEN PAVER SECTIONS.
11. CONNECT TO EXISTING SIDEWALK (PAVERS).
12. CONNECT NEW CONCRETE SIDEWALK TO EDGE OF EXISTING SIDEWALK.
13. REPLACE PAVERS REMOVED TO ALLOW INSTALLATION OF NEW DRAIN LINE. SEE SHEET C3.0. COMPACT TOP 12" OF SUBGRADE TO 98% STANDARD PROCTOR. INSTALL PAVERS SAME AS NEW PAVERS.
14. SEE ARCHITECTURAL PLANS FOR INFORMATION ON MODIFYING EXISTING WALLS.

COORDINATE SCHEDULE

COORDINATE	DESCRIPTION	NORTHING	EASTING
C1	RADIUS	787281.6240	1991097.6036
C2	RADIUS	787286.4743	1991095.8078
C3	RADIUS	787286.0352	1991109.7863

The Palmetto Utility Protection Service, Inc.
810 Dutch Square Blvd, Suite 220 Columbia, South Carolina 29210 (803) 939-1017
South Carolina 811 Call 811 Before you Dig
3 DAYS BEFORE DIGGING IN SOUTH CAROLINA
CALL 811
CONTRACTOR SHALL CONTACT THE UNDERGROUND LOCATORS EVERY 10 DAYS FOR AN UPDATE TO UTILITY LOCATIONS.

GRAPHIC SCALE
10 0 5 10 20 40
(IN FEET)
1 inch = 10 ft.

RB TODD CONSULTING ENGINEERS
7436 Broad River Road, Suite 212
Irmo, S.C. 29063
Tel. 803.781.3141
Fax. 803.781.3142
www.rbtodd.com

The Boudreaux Group
The Boudreaux Group, Inc.
1230 Lady St., Suite 300 (29201)
P.O. Box 1568
Columbia, SC 29202
803 709 0247 P
info@boudreauxgroup.com
Interdisciplinary Design Architecture Interiors Planning

A/E Seal
SOUTH CAROLINA
RB TODD & ASSOCIATES, INC.
NO. C03047
CERTIFICATE OF AUTHORIZATION

A/E Seal
SOUTH CAROLINA
REGISTERED PROFESSIONAL ENGINEER
NO. 15190
ROBERT BRUCE TODD
10/01/14

Project Title
UNIVERSITY OF SOUTH CAROLINA
SCHOOL OF JOURNALISM
BROADCAST STUDIO EAST

CONSTRUCTION DOCUMENTS
COLUMBIA, SOUTH CAROLINA

Project No. U-646-12-3
Drawn By
Checked By
Date 10.01.14

This drawing and the design thereon are the property of The Boudreaux Group, Inc. The reproduction, copying, or other use of this drawing without the written consent of The Boudreaux Group, Inc. is prohibited. Any unauthorized use of this project is to the detriment of The Boudreaux Group.

Revisions
No. Name Date

Drawing Title
STAKING PLAN

Drawing No.
C2.0

Oct 07, 2014 - 10:06am S:\Projects\13224 USC Broadcast Studio\Drawings\Civil\141006\13224 USC Broadcast Studio.dwg

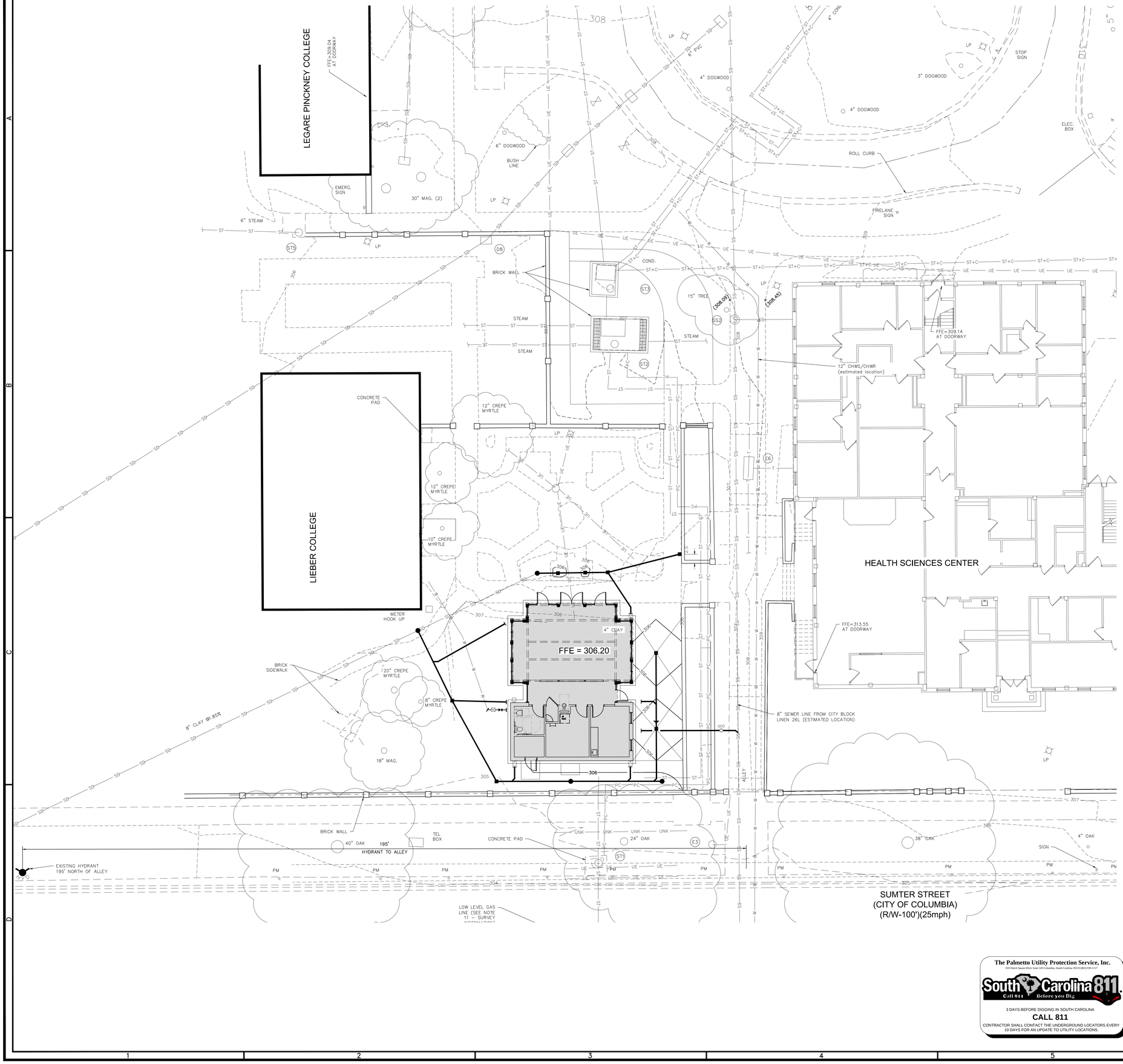

LEGEND (CIVIL)

NEW	EXISTING	DESCRIPTION
N/A		RIGHT OF WAY
		CURB AND GUTTER
		BITUMINOUS SURFACE
		CONCRETE SURFACE
		BRICK PAVER
310	310	CONTOURS
+ 309.60	+ (309.60)	SPOT GRADE ELEVATION
		BUILDING
	SD	STORM DRAIN LINE w/STRUCTURE
	SS	SANITARY SEWER LINE w/MANHOLE
N/A	W	WATER LINE
N/A		WATER VALVE
N/A		WATER SPIGOT
N/A	UE	UNDERGROUND ELECTRIC
N/A	UE	LIGHT POLE w/UNDERGROUND ELECTRIC
N/A	OHE	OVERHEAD ELECTRIC w/POLE
N/A	T	TELEPHONE LINE
N/A		TREE
N/A	X	FENCE
N/A	PM	PARKING METER
N/A	GAS	NATURAL GAS LINE
PC	ST+C	STEAM CONDENSATE
N/A	1	KEY NOTE
N/A		PROJECT LIMITS
		BRICK WALL
N/A	D2	DRAINAGE STRUCTURE
N/A	ST2	STEAM STRUCTURE
GTD	N/A	GRADE TO DRAIN

GENERAL NOTES

1. SEE SHEET C1.0 FOR ADDITIONAL GENERAL NOTES
2. THE CONTRACTOR SHALL NOTIFY THE ENGINEER PRIOR TO CONSTRUCTION OF ANY DISCREPANCIES BETWEEN THESE PLANS AND ACTUAL SITE CONDITIONS.
3. THE CONTRACTOR SHALL NOTIFY PUPS AT 1-888-721-7811 AT LEAST 72 HOURS PRIOR TO CONSTRUCTION TO HAVE ALL UNDERGROUND UTILITIES LOCATED.
4. THE CONTRACTOR SHALL OBTAIN COPIES OF ALL APPROVED PERMITS PRIOR TO CONSTRUCTION. THE CONTRACTOR SHALL ALSO COORDINATE THE MANDATORY PRE-CONSTRUCTION MEETING WITH CITY OFFICIALS.
5. ALL ITEMS TO REMAIN SHALL BE PROTECTED DURING DEMOLITIONS AND CONSTRUCTION OPERATIONS. THE CONTRACTOR SHALL REPAIR AND/OR REPLACE DAMAGED IMPROVEMENTS TO THE SATISFACTION OF THE OWNER.
6. CONTRACTOR SHALL REPAIR ALL DAMAGES TO EXISTING IMPROVEMENTS ASSOCIATED WITH CONSTRUCTION ACTIVITY. RETURN LAYDOWN AREA TO EXISTING CONDITIONS.
7. OWNER SHALL PAY ALL TAP AND IMPACT FEES ASSOCIATED WITH THE SANITARY SEWER SYSTEM.

The Palmetto Utility Protection Service, Inc.
810 Dutch Square Blvd, Suite 250 Columbia, South Carolina 29210 (803) 935-0017

South Carolina 811 Call 811 Before you Dig

3 DAYS BEFORE DIGGING IN SOUTH CAROLINA
CALL 811
CONTRACTOR SHALL CONTACT THE UNDERGROUND LOCATORS EVERY 10 DAYS FOR AN UPDATE TO UTILITY LOCATIONS.

GRAPHIC SCALE
10 0 5 10 20 40
(IN FEET)
1 inch = 10 ft.

RB TODD CONSULTING ENGINEERS
7436 Broad River Road, Suite 212
Irmo, SC 29063
Tel 803.781.3141
Fax 803.781.3142
www.rbtodd.com

The Boudreaux Group
The Boudreaux Group, Inc.
1230 Lady St., Suite 300 (29201)
P.O. Box 7566
Columbia, SC 29250
803 799 1947 P
803 771 1844 F
info@boudreauxgroup.com
Interdisciplinary Design Architecture Interiors Planning

A/E Seal: SOUTH CAROLINA — RB TODD & ASSOCIATES, INC. NO. C03047 — CERTIFICATE OF AUTHORIZATION

A/E Seal: SOUTH CAROLINA — REGISTERED LANDSCAPE ARCHITECT — NO. 1599 — BRENT BRUCE — 2020

10/01/14

Project Title
UNIVERSITY OF SOUTH CAROLINA
SCHOOL OF JOURNALISM
BROADCAST STUDIO

CONSTRUCTION DOCUMENTS

COLUMBIA, SOUTH CAROLINA

Project No. U-646-12-3
Drawn By
Checked By
Date 10.01.14

This drawing and the design thereon are the property of The Boudreaux Group, Inc. The reproduction, loaning, or the making of any copies thereof, without consent of The Boudreaux Group, Inc. is prohibited. Any unauthorized use of this drawing is illegal and will be subject to legal action by The Boudreaux Group.

Revisions

No.	Name	Date

Drawing Title
OVERALL GRADING AND UTILITIES PLAN

Drawing No.
C3.0

Oct 22, 2014 – 2:22pm S:\Projects\13224 USC Broadcast Studio\Drawings\Civil\141006\13224 USC Broadcast Studio.dwg

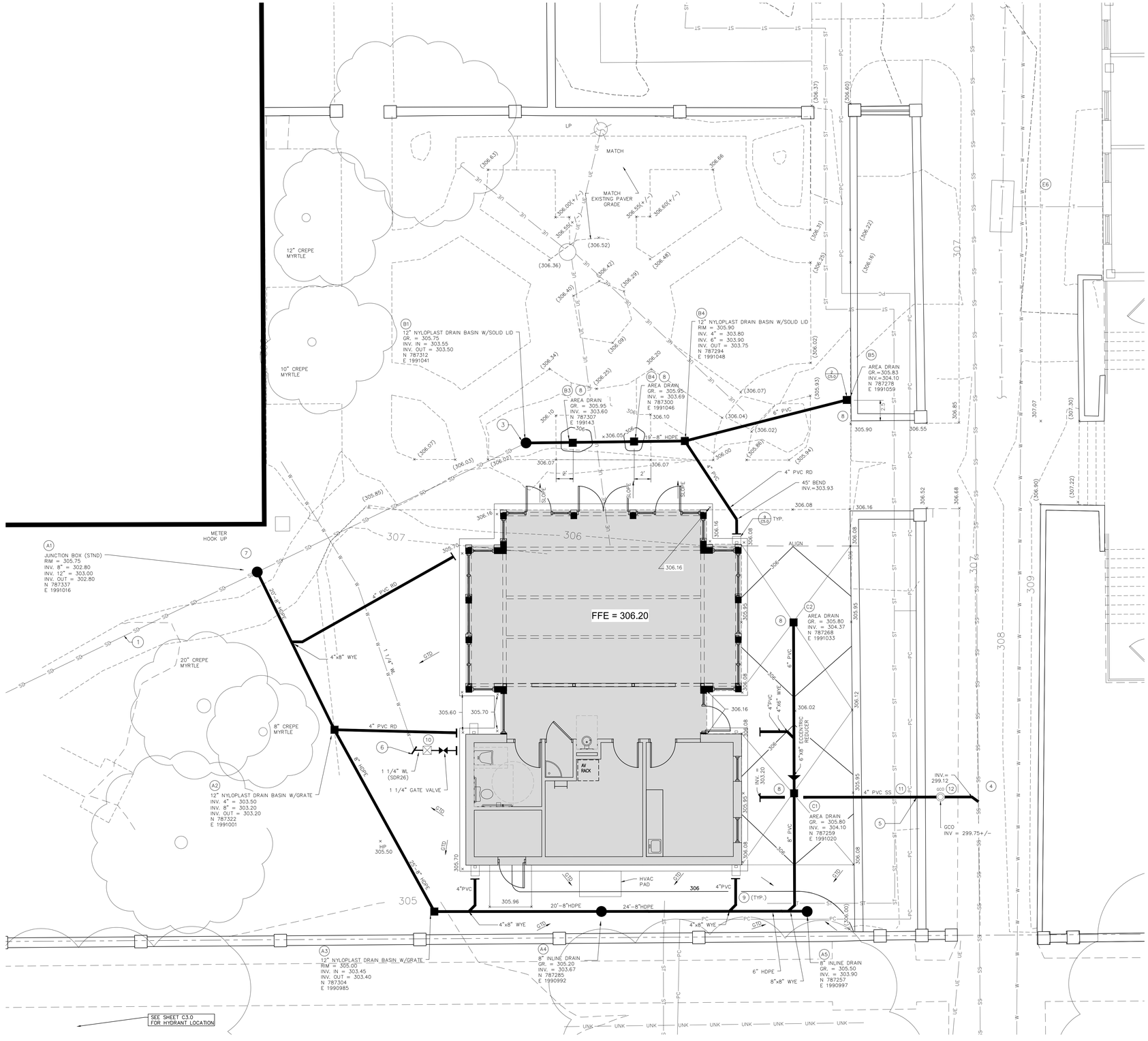



VICINITY MAP
SCALE: 1"=1000'

LEGEND (CIVIL)

NEW	EXISTING	DESCRIPTION
N/A		RIGHT OF WAY
		CURB AND GUTTER
		BITUMINOUS SURFACE
		CONCRETE SURFACE
		BRICK PAVER
310	310	CONTOURS
+ 309.60	+ (309.60)	SPOT GRADE ELEVATION
		BUILDING
	SD	STORM DRAIN LINE w/STRUCTURE
	SS	SANITARY SEWER LINE w/MANHOLE
N/A	W	WATER LINE
N/A		WATER VALVE
N/A		WATER SPIGOT
N/A	UE	UNDERGROUND ELECTRIC
N/A	UE	LIGHT POLE w/UNDERGROUND ELECTRIC
N/A	OHE	OVERHEAD ELECTRIC w/POLE
N/A	T	TELEPHONE LINE
N/A		TREE
N/A	x	FENCE
N/A	PM	PARKING METER
N/A	GAS	NATURAL GAS LINE
		STEAM
PC	ST+C	CONDENSATE
N/A	1	KEY NOTE
N/A		PROJECT LIMITS
		BRICK WALL
N/A	D2	DRAINAGE STRUCTURE
N/A	ST2	STEAM STRUCTURE
GTD	N/A	GRADE TO DRAIN

GENERAL NOTES

1. SEE SHEET C1.0 FOR ADDITIONAL GENERAL NOTES
2. THE CONTRACTOR SHALL NOTIFY THE ENGINEER PRIOR TO CONSTRUCTION OF ANY DISCREPANCIES BETWEEN THESE PLANS AND ACTUAL SITE CONDITIONS.
3. THE CONTRACTOR SHALL NOTIFY PUPS AT 1-888-721-7811 AT LEAST 72 HOURS PRIOR TO CONSTRUCTION TO HAVE ALL UNDERGROUND UTILITIES LOCATED.
4. THE CONTRACTOR SHALL OBTAIN COPIES OF ALL APPROVED PERMITS PRIOR TO CONSTRUCTION. THE CONTRACTOR SHALL ALSO COORDINATE THE MANDATORY PRE-CONSTRUCTION MEETING WITH CITY OFFICIALS.
5. ALL ITEMS TO REMAIN SHALL BE PROTECTED DURING DEMOLITIONS AND CONSTRUCTION OPERATIONS. THE CONTRACTOR SHALL REPAIR AND/OR REPLACE DAMAGED IMPROVEMENTS TO THE SATISFACTION OF THE OWNER.
6. CONTRACTOR SHALL REPAIR ALL DAMAGES TO EXISTING IMPROVEMENTS ASSOCIATED WITH CONSTRUCTION ACTIVITY. RETURN LAYDOWN AREA TO EXISTING CONDITIONS.
7. OWNER SHALL PAY ALL TAP AND IMPACT FEES ASSOCIATED WITH THE SANITARY SEWER SYSTEM.

KEY NOTES

1. CONTRACTOR TO FLUSH EXISTING 8" STORMDRAIN CLEAN OF DEBRIS TO NEAREST DOWNSTREAM STRUCTURE.
2. ALL NYLOPLAST DRAIN BASINS TO HAVE A 12" STANDARD H-20 HINGED GRATE.
3. CONNECT EXISTING 8" CLAY DRAIN LINE TO NEW DRAIN BASIN.
4. CITY OF COLUMBIA TO MAKE TAP ON EXISTING 8" SANITARY SEWER LINE. OWNER TO PAY TAP FEES.
5. INSTALL SEWER LINE UNDER EXISTING BRICKWALL WHILE LEAVING WALL IN PLACE. DO NOT DISTURB WALL. REPLACE EXCAVATED SOIL UNDER WALL WITH FLOWABLE FILL.
6. LOCATE AND CONNECT TO EXISTING 1"-1/4" WATER LINE. EXTEND NEW 1"-1/4" WATER LINE (SDR26) TO BUILDING. ABANDON REMAINING WATERLINE PAST CONNECTION.
7. CONSTRUCT JUNCTION BOX AROUND EXISTING 8" CLAY STORM DRAIN LINE. CUT 8" CLAY PIPE FLUSH WITH BOX.
8. INSTALL ZURN ZB154-DT-VP 11" SQUARE TOP PROM-DECK DRAIN WITH HEEL PROOF AND VANDAL PROOF COVER (OR APPROVED EQUAL). CONNECT STRUCTURES B3 AND B4 TO MAIN 8" LINE USING 4" PVC VERTICAL PIPE AND 4"X6"X8" TEE. AT STRUCTURE 'C1'; CONNECT 6" VERTICAL DRAIN LINE TO 8" MAIN LINE USING 8"X8"X6" TEE.
9. CONNECT PVC ROOF DRAINS TO HDPE STORM LINES USING INSERTATEE WYE CONNECTIONS.
10. INSTALL 1 1/2" TESTABLE BACKFLOW PREVENTION DEVICE (SCDHEC APPROVED) IN JUMBO METER BOX.
11. ADJUST 4" PVC SEWER SERVICE AS NEEDED TO ACCOMMODATE NEW MECHANICAL LINES MAINTAINING A MINIMUM SLOPE OF 1.0%.
12. CITY OF COLUMBIA TO INSTALL CLEANOUT. CONTRACTOR TO INSTALL SEWER SERVICE FROM BUILDING TO CLEANOUT. COORDINATE WITH CITY OF COLUMBIA ON CONNECTION TO CLEANOUT.

UTILITY CLOSE-OUT INFORMATION (WATER AND SEWER)

RECORD DRAWINGS, TESTS, AND ANALYSES OF INSTALLED WATER AND SANITARY SEWER SYSTEMS ARE REQUIRED AT PROJECT CLOSEOUT.

1. RECORD DRAWINGS OF THE INSTALLED SYSTEMS, AS WELL AS RESULTS OF ALL HYDROSTATIC TESTS AND BACTERIOLOGICAL ANALYSES, MUST BE PROVIDED TO THE SOUTH CAROLINA DEPARTMENT OF HEALTH AND ENVIRONMENTAL CONTROL BY THE ENGINEER IN ORDER TO OBTAIN A PERMIT TO OPERATE THE SYSTEM. THE CONTRACTOR SHALL PROVIDE A COMPLETE RECORD OF THE INSTALLED SYSTEMS AND THE RESULTS OF THE TESTING AND ANALYSIS TO THE ENGINEER.
2. RECORD DRAWINGS SHALL BE A COMPLETE SET OF INFORMATION INDICATING THE LOCATIONS OF LINES AND APPURTENANCES. THE DRAWINGS SHALL GIVE ACCURATE LOCATIONS OF INSTALLED LINES AND APPURTENANCES BY THE USE OF REFERENCES TO PERMANENT SITE FEATURES. FOR ACCURATE LOCATION OF THE LINES AND THE APPURTENANCES, THE DRAWINGS MUST SHOW TWO MEASURED DISTANCES FROM BENDS, VALVES, MANHOLES, HYDRANTS, ETC, TO PERMANENT SITE FEATURES (BUILDING CORNERS, POWER POLES, PAVEMENT EDGE, DRAINAGE STRUCTURES, ETC.). THIS INFORMATION MUST BE PROVIDED TO THE ENGINEER IN ELECTRONIC FORMAT (AUTOCAD 2004). SWING TIES SHALL BE NO LONGER THAN 150'.
3. HYDROSTATIC TESTS SHALL BE CONDUCTED IN THE PRESENCE OF THE ENGINEER OR THE OWNER, WHO WILL BE RESPONSIBLE FOR CERTIFYING THE RESULTS.
4. BACTERIOLOGICAL SAMPLING AND ANALYSES RESULTS SHALL BE PROVIDED TO THE ENGINEER.
5. UNDER NO CIRCUMSTANCES WILL ANY PORTION OF THE WORK BE PLACED IN SERVICE WITHOUT APPROVAL FROM THE ENGINEER.

UTILITY CLOSE-OUT INFORMATION (STORM DRAINAGE)

1. THE CONTRACTOR SHALL SUBMIT A COMPLETE SET OF RECORD DRAWINGS FOR THE STORM DRAINAGE SYSTEM AT THE COMPLETION OF THE PROJECT. THE RECORD DRAWING INFORMATION SHALL INCLUDE THE LOCATIONS OF ALL STRUCTURES USING STATE PLANE COORDINATES AND TWO SWING TIES FROM KNOWN POINTS. RIM, GRATE, THROAT, AND INVERT ELEVATIONS AT PIPES, ALONG WITH PIPE SIZES AND TYPES, SHALL BE PROVIDED TO THE ENGINEER. THIS INFORMATION MUST BE PROVIDED TO THE ENGINEER IN ELECTRONIC FORMAT (AUTOCAD 2010 OR LOWER). SWING TIES SHALL BE LONGER THAN 150'.

GRAPHIC SCALE

5 0 2.5 5 10 20

(IN FEET)
1 inch = 5 ft.

The Palmetto Utility Protection Service, Inc.
810 Dutch Square Blvd, Suite 320 Columbia, South Carolina 29210 (803) 939-1117
South Carolina 811 Call 811 Before you Dig
3 DAYS BEFORE DIGGING IN SOUTH CAROLINA
CALL 811
CONTRACTOR SHALL CONTACT THE UNDERGROUND LOCATORS EVERY 10 DAYS FOR AN UPDATE TO UTILITY LOCATIONS.

RB TODD CONSULTING ENGINEERS
7436 Broad River Road, Suite 212
Irmo, South Carolina 29063
Tel. 803.781.3141
Fax. 803.781.3142
www.rbtodd.com

The Boudreaux Group
The Boudreaux Group, Inc.
1230 Lady St., Suite 300 (29201)
P.O. Box 8566
Columbia, SC 29250
803 799 0247 P
803 771 0844 F
info@boudreauxgroup.com
Interdisciplinary Design Architecture Interiors Planning

A/E Seal: SOUTH CAROLINA — RB TODD & ASSOCIATES, INC. NO. C03047 — CERTIFICATE OF AUTHORIZATION

A/E Seal: SOUTH CAROLINA PROFESSIONAL ENGINEER — NO. 15261 — ROBERT BRUCE TODD — 10/01/14

Revisions		
No.	Name	Date

Project No. U-846-12-3
Drawn By
Checked By
Date 10.01.14

This drawing and the design thereon are the property of RB Todd Consulting Engineers, Inc. The reproduction, copying, or other use of this drawing without the written consent of RB Todd Consulting Engineers, Inc. is prohibited by law and any unauthorized use is subject to legal action by The Southeast Group

Project Title
UNIVERSITY OF SOUTH CAROLINA
SCHOOL OF JOURNALISM
BROADCAST STUDIO

CONSTRUCTION DOCUMENTS
COLUMBIA, SOUTH CAROLINA

Drawing Title
GRADING AND UTILITIES PLAN

Drawing No.
C3.1

Oct 27, 2014 - 12:39pm S:\Projects\13224 USC Broadcast Studio\Drawings\Civil\141006\13224 USC Broadcast Studio.dwg

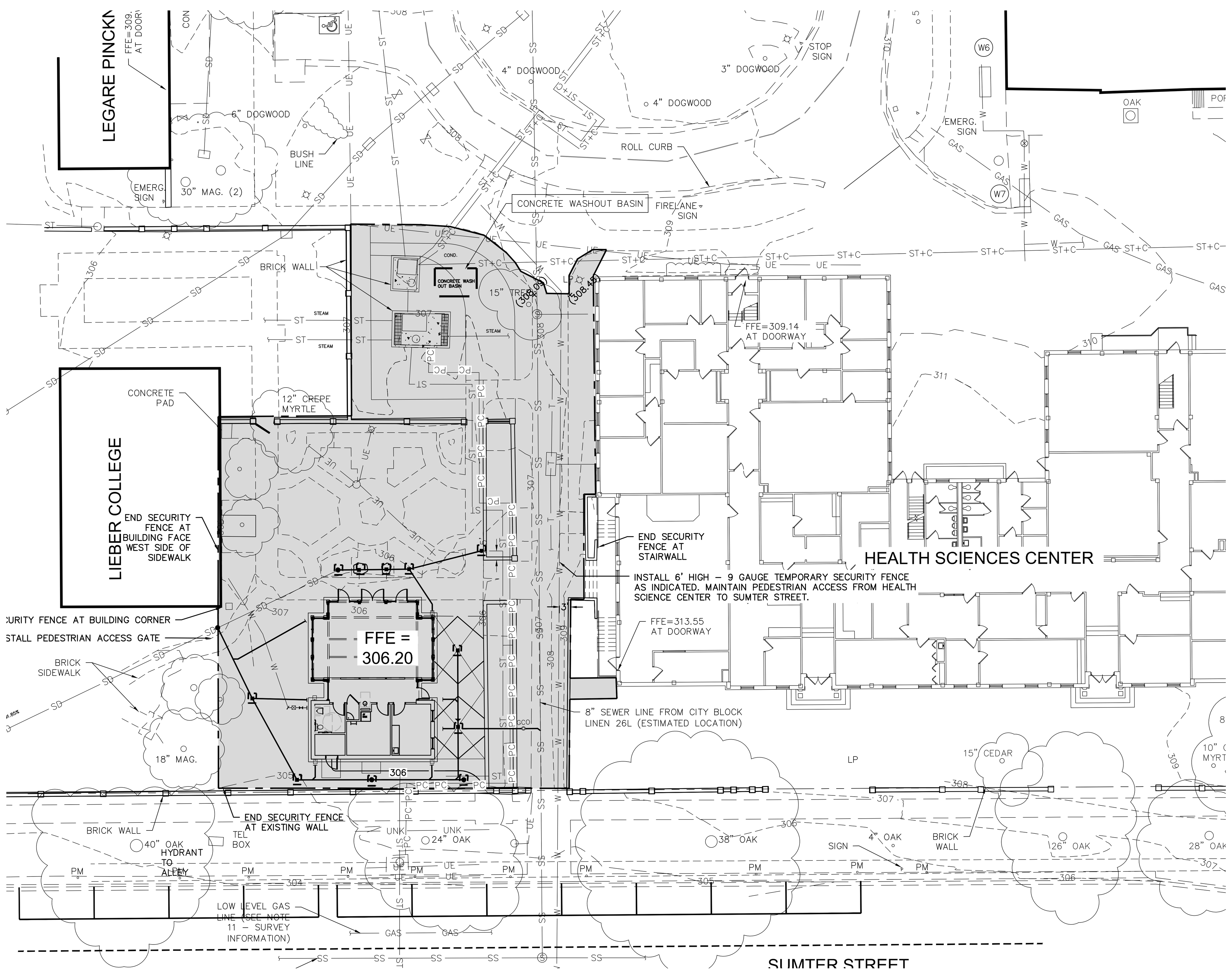

LEGEND (CIVIL)

NEW	DESCRIPTION
(line)	SILT FENCE
(shaded box)	LIMITS OF DISTURBANCE
(inlet symbol)	INLET PROTECTION
(heavy line)	STORM DRAIN PIPE

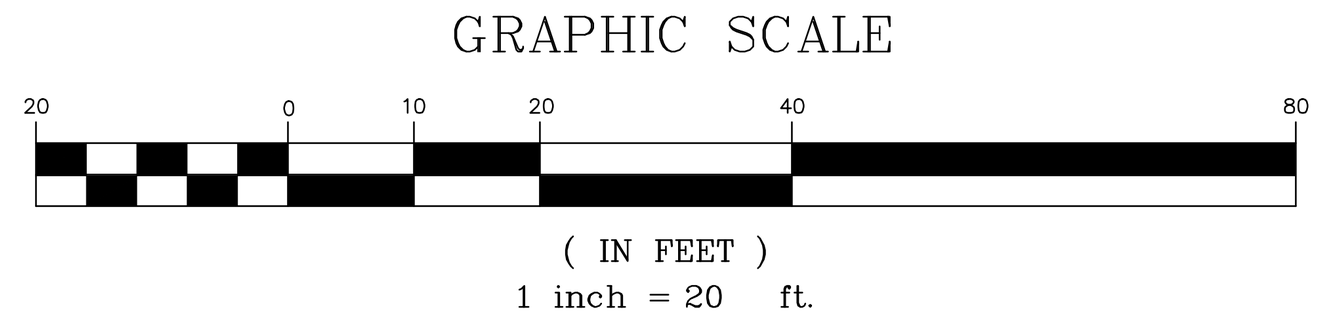

AIRBORNE DUST CONTROL

THE CONTRACTOR SHALL IMPLEMENT DUST CONTROL MEASURES AS OUTLINED IN THE SOUTH CAROLINA DHEC STORMWATER MANAGEMENT BMP HANDBOOK AS NEEDED TO CONTROL AIRBORNE DUST DURING CONSTRUCTION. COORDINATE WITH ENGINEER PRIOR TO IMPLEMENTATION OF VARIOUS MEASURES.

SIGNATURES AND CERTIFICATIONS

A. ONE COPY OF THE SWPP, ALL SPECIFICATIONS, AND SUPPORTING CALCULATIONS, FORMS, AND REPORTS ARE HEREWITH SUBMITTED AND MADE A PART OF THIS APPLICATION. I HAVE PLACED MY SIGNATURE AND SEAL ON THE DESIGN DOCUMENTS SUBMITTED SIGNIFYING THAT I ACCEPT RESPONSIBILITY FOR THE DESIGN OF THE SYSTEM. FURTHER, I CERTIFY TO THE BEST OF MY KNOWLEDGE AND BELIEF, THAT THE DESIGN IS CONSISTENT WITH THE REQUIREMENTS OF TITLE 48, CHAPTER 14 OF THE CODE OF LAWS OF SC, 1976 AS AMENDED, PURSUANT TO REGULATION 72-300 ET SEQ., AND IN ACCORDANCE WITH THE TERMS AND CONDITIONS OF SCR100000. (THIS SHOULD BE THE PERSON IDENTIFIED IN SECTION V.A.)

Bruce Todd, PE — [signature] — 15310

PRINTED NAME OF SWPPP PREPARER — SIGNATURE OF SWPPP PREPARER — S.C. REGISTRATION

B. I CERTIFY UNDER PENALTY OF LAW THAT THIS DOCUMENT AND ALL ATTACHMENTS WERE PREPARED UNDER MY DIRECTION OR SUPERVISION IN ACCORDANCE WITH A SYSTEM DESIGNED TO ASSURE THAT QUALIFIED PERSONNEL PROPERLY GATHER AND EVALUATE THE INFORMATION SUBMITTED. BASED ON MY INQUIRY OF THE PERSON OR PERSONS WHO MANAGE THE SYSTEM, OR THOSE PERSONS DIRECTLY RESPONSIBLE FOR GATHERING THE INFORMATION, THE INFORMATION SUBMITTED IS, TO THE BEST OF MY KNOWLEDGE AND BELIEF, TRUE, ACCURATE, AND COMPLETE. I AM AWARE THAT THERE ARE SIGNIFICANT PENALTIES FOR SUBMITTING FALSE INFORMATION, INCLUDING THE POSSIBILITY OF FINE AND IMPRISONMENT FOR KNOWING VIOLATIONS.

I HEREBY CERTIFY THAT ALL LAND-DISTURBING CONSTRUCTION AND ASSOCIATED ACTIVITY PERTAINING TO THIS SITE SHALL BE ACCOMPLISHED PURSUANT TO AND IN KEEPING WITH THE TERMS AND CONDITIONS OF THE APPROVED PLANS AND SCR100000. I ALSO CERTIFY THAT A RESPONSIBLE PERSON WILL BE ASSIGNED TO THE THE PROJECT FOR DAY-TO-DAY CONTROL. I HEREBY GRANT AUTHORIZATION TO THE DEPARTMENT OF HEALTH AND ENVIRONMENTAL CONTROL AND/OR THE LOCAL IMPLEMENTING AGENCY THE RIGHT OF ACCESS TO THE SITE AT ALL TIMES FOR THE PURPOSE OF ONSITE INSPECTIONS DURING THE COURSE OF CONSTRUCTION AND TO PERFORM MAINTENANCE INSPECTIONS FOLLOWING THE COMPLETION OF THE LAND-DISTURBING ACTIVITY. (SEE SECTION 122.22 OF S.C. REG. 61-9 FOR SIGNATORY AUTHORITY INFORMATION.)

Ann G Derrick for USC — [signature] for USC — PROJ MAN

PRINTED NAME OF PROJECT OWNER/OPERATOR — SIGNATURE OF PROJECT OWNER/OPERATOR — TITLE/POSITION

APPLICANT'S CERTIFICATION STATEMENT

I (WE) HEREBY CERTIFY THAT ALL CLEARING, GRADING, CONSTRUCTION AND/OR DEVELOPMENT WILL BE DONE PURSUANT TO THIS PLAN.

10/4/2014 — Ann G Derrick for USC

DATE — APPLICANT

DESIGN CERTIFICATION STATEMENT

I HEREBY CERTIFY THAT THIS PLAN IS DESIGNED TO MEET STORM DRAINAGE REQUIREMENTS AND TO CONTAIN SILT ON THE PROPERTY CONCERNED TO THE MAXIMUM EXTENT FEASIBLE. PROVISIONS FOR EROSION AND SEDIMENT CONTROL AND STORM DRAINAGE ARE IN ACCORDANCE WITH THE COLUMBIA SEDIMENT AND EROSION CONTROL AND STORM DRAINAGE ORDINANCE.

10/7/14 — [signature]

DATE — SOUTH CAROLINA REGISTERED PROFESSIONAL ENGINEER

CONSTRUCTION SEQUENCE OF ENTIRE CONSTRUCTION AREA FOR EROSION AND SEDIMENT CONTROL

1. SEE SWPPP FOR LIMITS OF DISTURBANCE AND FLAG LIMITS FOR CLEARING AS NEEDED.
2. INSTALL SILT FENCES AND CONTROL DEVICES AS SHOWN ON PLANS WHERE APPLICABLE FOR INITIAL GRADING.
3. CLEAR FLAGGED AREA.
4. SCRAPE EXISTING LAYER OF VEGETATION (MIN. 2" DEPTH) FROM CONSTRUCTION AREA AND DISPOSE OF OFFSITE.
5. INSTALL STORM DRAINAGE SYSTEM AND SILT FENCES IN SEQUENCE WITH EARTHWORK OPERATIONS.
6. ALL DISTURBED AREAS SHALL RECEIVE STABILIZING MEASURES (TEMPORARY GRASSING) WITHIN 14 DAYS, EXCEPT WHERE CONSTRUCTION WILL RESUME WITH 21 DAYS.
7. SEE NOTE No. 3 UNDER SEDIMENT AND EROSION CONTROL NOTES FOR INSPECTION INFORMATION.
8. COMPLETE CONSTRUCTION.
9. FINAL GRADING, GRASSING, AND LANDSCAPING.
10. EROSION CONTROL MEASURES TO BE REMOVED AFTER ALL DISTURBED AREAS HAVE BEEN STABILIZED.
11. SEDIMENT ACCUMULATIONS SHALL BE REMOVED FROM IMPOUNDED AREAS ONCE THE SITE IS STABILIZED. COORDINATE WITH OWNER/ARCHITECT PRIOR TO COMMENCING OPERATION.

RB TODD CONSULTING ENGINEERS
7436 Broad River Road, Suite 212
Irmo, S.C. 29063
Tel. 803.781.3141
Fax. 803.781.3142
www.rbtodd.com

EROSION AND SEDIMENT CONTROL MEASURES

GENERAL

THE CONTRACTOR IS ADVISED THAT ALL GRADING AND DRAINAGE WORK ON THE PROJECT IS PERMITTED UNDER THE REQUIREMENTS OF THE SOUTH CAROLINA DEPARTMENT OF HEALTH AND ENVIRONMENTAL CONTROL, DIVISION OF STORMWATER MANAGEMENT. COMPLIANCE WITH THE PERMITTED CONDITIONS IS MANDATORY. THE CONTRACTOR SHALL RELY ON EXPERIENCE AND CONTROL OF THE WORK TO PROVIDE ADEQUATE AND ORDERLY CONSTRUCTION METHODS TO CONTROL STORMWATER RUNOFF AND PREVENT THE EXCESSIVE MIGRATION OF SEDIMENTS FROM THE SITE. THE CONTRACTOR ALSO SHALL DIRECT INSTALLATION OF NECESSARY TEMPORARY CONSTRUCTION MEASURES TO CONTROL STORMWATER RUNOFF. ALL STORMWATER MANAGEMENT MEASURES SHALL BE INSPECTED AFTER EACH RAIN EVENT, AND ANY REQUIRED MAINTENANCE SHALL BE PERFORMED.

SILT FENCES

SILT FENCES OR EQUIVALENT SEDIMENT CONTROL SHALL BE INSTALLED WHERE INDICATED AND MAINTAINED IN ACCORDANCE WITH THIS PLAN.

STORM DRAINAGE STRUCTURES

TEMPORARY BARRIERS OF EITHER SILT FENCING OR ROCK RIPRAP SHALL BE INSTALLED AND MAINTAINED AROUND STORM DRAINAGE STRUCTURES UNTIL THEIR DRAINAGE AREA IS STABILIZED. STORM DRAINAGE PIPES, INCLUDING OUTLET PROTECTION, SHALL BE INSTALLED AS SOON AS EARTH GRADING IS ADEQUATE TO ACCEPT PIPE INSTALLATION. INLET STRUCTURES SHALL BE CONSTRUCTED AS THE EARTH FILL IS PLACED, AND CONSTRUCTION SHALL AT ALL TIMES PROVIDE SURFACE DRAINAGE TO THEM. TEMPORARY BARRIERS SHALL BE INSTALLED AND MAINTAINED AT EACH INLET AS THE EARTH FILL RISES.

STABILIZATION OF DISTURBED AREAS

DISTURBED AREAS SHALL RECEIVE STABILIZING MEASURES WITHIN 14 DAYS AFTER DISTURBANCES, UNLESS CONSTRUCTION WILL RESUME IN THAT AREA WITHIN 21 DAYS FROM WHEN ACTIVITIES CEASED.

INSPECTION AND MAINTENANCE

SEDIMENT CONTROL SYSTEMS SHALL BE INSPECTED AT LEAST WEEKLY AND AFTER ANY RAINFALL EVENT EXCEEDING 0.5 INCH. ANY NEEDED CORRECTIONS OR MAINTENANCE SHALL BE ACCOMPLISHED IMMEDIATELY THEREAFTER.

REMOVAL OF SEDIMENT CONTROL SYSTEMS

TEMPORARY EROSION CONTROL MEASURES SHALL BE REMOVED AFTER EACH AFFECTED AREA HAS BEEN "FINALLY STABILIZED".

TEMPORARY DIVERSIONS

TEMPORARY DIVERSION BERMS AND/OR DITCHES WILL BE PROVIDED AS NEEDED DURING CONSTRUCTION TO PROTECT WORK AREAS FROM UPSLOPE RUNOFF AND/OR DIVERT SEDIMENT LADEN WATER TO APPROPRIATE TRAPS OR STABLE OUTLETS.

TEMPORARY DIVERSIONS SHALL BE CONSTRUCTED AS NECESSARY TO PREVENT FLOW OF STORMWATER OVER DISTURBED AREA. TEMPORARY DIVERSION OUTLETS SHALL HAVE ADEQUATE CAPACITY AND TERMINATE INTO DENSE VEGETATION, ROCK RIPRAP, STORM STRUCTURES, OR SIMILAR MEASURES TO REDUCE EROSION AT THE OUTLET. TEMPORARY DIVERSION CHANNELS SHALL BE CONSTRUCTED AND MAINTAINED AT A MINIMUM OF 1 PERCENT GRADE AND A MAXIMUM GRADE OF 2 PERCENT. THE CAPACITY OF TEMPORARY DIVERSIONS SHALL BE RESTORED ANYTIME THE EXCAVATED CHANNEL BECOMES FULL OF SEDIMENT AT ANY POINT IN THE LENGTH OF THE DIVERSION. THE RIDGE AND CHANNEL OF THE TEMPORARY DIVERSIONS SHALL BE STABILIZED WITH TEMPORARY VEGETATION IMMEDIATELY AFTER CONSTRUCTION AND RE-STABILIZED AFTER EACH DISTURBANCE.

SEDIMENT AND EROSION CONTROL NOTES

1. THE CONTRACTOR SHALL PROVIDE AND MAINTAIN THROUGHOUT THE LENGTH OF CONSTRUCTION SILT FENCES AT ALL STORM DRAINAGE STRUCTURES AND ALONG THE PERIMETER OF CONSTRUCTION AS NECESSARY TO CONTAIN ALL SEDIMENT RUNOFF WITHIN THE AREAS DISTURBED BY CONSTRUCTION.
2. STABILIZATION MEASURES SHALL BE INITIATED AS SOON AS PRACTICABLE IN PORTIONS OF THE SITE WHERE CONSTRUCTION ACTIVITIES HAVE TEMPORARILY OR PERMANENTLY CEASED, BUT IN NO CASE MORE THAN FOURTEEN (14) DAYS AFTER WORK HAS CEASED EXCEPT AS STATED BELOW.
   > WHERE STABILIZATION BY THE 14th DAY IS PRECLUDED BY SNOW COVER OR FROZEN GROUND CONDITIONS, STABILIZATION MEASURES MUST BE INITIATED AS SOON AS PRACTICABLE.
   > WHERE CONSTRUCTION ACTIVITY ON A PORTION OF THE SITE IS TEMPORARILY CEASED, AND EARTH-DISTURBING ACTIVITIES WILL BE RESUMED WITHIN 14 DAYS, TEMPORARY STABILIZATION MEASURES DO NOT HAVE TO BE INITIATED ON THAT PORTION OF THE SITE.
3. ALL SEDIMENT AND EROSION CONTROL DEVICES SHALL BE INSPECTED AT LEAST ONCE EVERY CALENDAR WEEK. IF PERIODIC INSPECTION OR OTHER INFORMATION INDICATES THAT A BMP HAS BEEN INAPPROPRIATELY OR INCORRECTLY INSTALLED, THE PERMITTEE MUST ADDRESS THE NECESSARY REPLACEMENT OR MODIFICATION REQUIRED TO CORRECT THE BMP WITHIN 48 HOURS OR IDENTIFICATION.
4. SEDIMENT DEPOSITS SHOULD BE REMOVED WHEN THEY REACH ONE-THIRD THE HEIGHT OF THE SEDIMENT FENCE.
5. THE CONTRACTOR SHALL BE RESPONSIBLE FOR STABILIZING ALL SLOPES FROM FINISH GRADE TO NATURAL GROUND AND FOR PREVENTING EXCESSIVE EROSION FROM OCCURRING. IMMEDIATELY AFTER ESTABLISHING THE INTERMEDIATE ROUGH GRADE SLOPES AND AFTER REACHING THE FINAL GRADE SLOPES, THE CONTRACTOR SHALL PROVIDE GRASSING OF THESE SLOPES. WHEN SLOPES ARE DISTURBED BY SUBSEQUENT EXCAVATIONS FOR OTHER ITEMS, THE CONTRACTOR SHALL INSPECT THE REPAIRS AND CORRECT ANY DEFICIENCIES IN THE REPAIRS.
6. ALL GRADING WORK SHALL CONFORM SUBSTANTIALLY WITH THE GRADING PLANS. WHERE SPOT GRADES ARE INDICATED ON THE PLANS, THEY SHALL BE ESTABLISHED BY SCALING AND SHALL TAKE PRECEDENCE OVER CONTOURS. ALL GRADING BETWEEN SPOT GRADES SHALL BE SMOOTH AND UNIFORM.
7. THE CONTRACTOR SHALL ADEQUATELY COORDINATE THE INSTALLATION OF THE STORM DRAINAGE SYSTEM TO ENSURE THAT POSITIVE RUNOFF OF STORMWATER IS EFFECTED BOTH DURING CONSTRUCTION AND AFTER COMPLETION OF THE WORK.
8. IF NECESSARY, SLOPES WHICH EXCEED 8 VERTICAL FEET SHOULD BE STABILIZED WITH SYNTHETIC OR VEGETATIVE MATS, IN ADDITION TO HYDROSEEDING. IT MAY BE NECESSARY TO INSTALL TEMPORARY SLOPE DRAINS DURING CONSTRUCTION. TEMPORARY BERMS MAY BE NEEDED UNTIL THE SLOPE IS BROUGHT TO GRADE.
9. PROVIDE SILT FENCE AND/OR OTHER CONTROL DEVICES, AS MAY BE REQUIRED, TO CONTROL SOIL EROSION DURING UTILITY CONSTRUCTION. ALL DISTURBED AREAS SHALL BE CLEANED, GRADED, AND STABILIZED WITH GRASSING IMMEDIATELY AFTER THE UTILITY INSTALLATION. **FILL, COVER, AND TEMPORARY SEEDING AT THE END OF EACH DAY ARE RECOMMENDED. IF WATER IS ENCOUNTERED WHILE TRENCHING, THE WATER SHOULD BE FILTERED TO REMOVE ANY SEDIMENTS BEFORE BEING PUMPED BACK INTO ANY WATERS OF THE STATE.**
10. THE CONTRACTOR MUST TAKE NECESSARY ACTION TO MINIMIZE TRACKING OF MUD ONTO PAVED ROADWAY FROM CONSTRUCTION AREAS **AND GENERATION OF DUST.** THE CONTRACTOR SHALL REMOVE MUD/SOIL FROM PAVEMENT, AS MAY BE REQUIRED.
11. ALL EROSION CONTROL DEVICES SHALL BE PROPERLY MAINTAINED DURING ALL PHASES OF CONSTRUCTION UNTIL THE COMPLETION OF ALL CONSTRUCTION ACTIVITIES AND ALL DISTURBED AREAS HAVE BEEN STABILIZED. ADDITIONAL CONTROL DEVICES MAY BE REQUIRED DURING CONSTRUCTION IN ORDER TO CONTROL EROSION AND/OR OFFSITE SEDIMENTATION. ALL TEMPORARY CONTROL DEVICES SHALL BE REMOVED ONCE CONSTRUCTION IS COMPLETE AND THE SITE IS STABILIZED.
12. TEMPORARY DIVERSION BERMS AND/OR DITCHES SHALL BE PROVIDED AS NEEDED DURING CONSTRUCTION TO PROTECT WORK AREAS FROM UPSLOPE RUNOFF AND/OR DIVERT SEDIMENT-LADEN WATER TO APPROPRIATE TRAPS OR STABLE OUTLETS.
13. ALL WATERS OF THE STATE (WoS), INCLUDING WETLANDS, ARE TO BE FLAGGED OR OTHERWISE CLEARLY MARKED IN THE FIELD. A DOUBLE ROW OF SILT FENCE IS TO BE INSTALLED IN ALL AREAS WHERE A 50-FOOT BUFFER CANNOT BE MAINTAINED BETWEEN THE DISTURBED AREAS AND ALL WoS. A 10-FOOT BUFFER SHOULD BE MAINTAINED BETWEEN THE LAST ROW OF SILT FENCE AND ALL WoS.
14. LITTER, CONSTRUCTION DEBRIS, OILS, FUELS, BUILDING PRODUCTS WITH SIGNIFICANT POTENTIAL FOR IMPACT (SUCH AS STOCKPILES OF FRESHLY TREATED LUMBER), AND CONSTRUCTION CHEMICALS THAT COULD BE EXPOSED TO STORMWATER MUST BE PREVENTED FROM BECOMING A POLLUTANT SOURCE IN STORMWATER DISCHARGES.
15. A COPY OF THE SWPPP, INSPECTIONS RECORDS, AND RAINFALL DATA MUST BE RETAINED AT THE CONSTRUCTION SITE OR A NEARBY LOCATION EASILY ACCESSIBLE DURING NORMAL BUSINESS HOURS, FROM THE DATE OF COMMENCEMENT OF CONSTRUCTION ACTIVITIES TO THE DATE THAT FINAL STABILIZATION IS REACHED.
16. INITIATE STABILIZATION MEASURES ON ANY EXPOSED STEEP SLOPE (3H:1V OR GREATER) WHERE LAND-DISTURBING ACTIVITIES HAVE PERMANENTLY OR TEMPORARILY CEASED, AND WILL NOT RESUME FOR A PERIOD OF 7 CALENDAR DAYS.
17. MINIMIZE SOIL COMPACTION AND, UNLESS INFEASIBLE, PRESERVE TOPSOIL.
18. MINIMIZE DISCHARGE OF POLLUTANTS FROM EQUIPMENT AND VEHICLE WASHING, WHEEL WASH WATER, AND OTHER WASH WATERS. WASH WATERS MUST BE TREATED IN A SEDIMENT BASIN OR ALTERNATIVE CONTROL THAT PROVIDES EQUIVALENT OR BETTER TREATMENT PRIOR TO DISCHARGE.
19. MINIMIZE THE DISCHARGE OF POLLUTANTS FROM DEWATERING OF TRENCHES AND EXCAVATED AREAS. THESE DISCHARGES ARE TO BE ROUTED THROUGH APPROPRIATE BMPs (SEDIMENT BASIN, FILTER BAG, ETC.).
20. THE FOLLOWING DISCHARGES FROM SITES ARE PROHIBITED:
   - WASTEWATER FROM WASHOUT OF CONCRETE, UNLESS MANAGED BY AN APPROPRIATE CONTROL;
   - WASTEWATER FROM WASHOUT AND CLEANOUT OF STUCCO, PAINT, FROM RELEASE OILS, CURING COMPOUNDS AND OTHER CONSTRUCTION MATERIALS;
   - FUELS, OILS, OR OTHER POLLUTANTS USED IN VEHICLE AND EQUIPMENT OPERATION AND MAINTENANCE; AND
   - SOAPS OR SOLVENTS USED IN VEHICLE AND EQUIPMENT WASHING.
21. AFTER CONSTRUCTION ACTIVITIES BEGIN, INSPECTIONS MUST BE CONDUCTED AT A MINIMUM OF AT LEAST ONCE EVERY CALENDAR WEEK AND MUST BE CONDUCTED UNTIL FINAL STABILIZATION IS REACHED ON ALL AREAS OF THE CONSTRUCTION SITE.
22. IF EXISTING BMPs NEED TO BE MODIFIED OR IF ADDITIONAL BMPs ARE NECESSARY TO COMPLY WITH THE REQUIREMENTS OF THIS PERMIT AND/OR SC's WATER QUALITY STANDARDS, IMPLEMENTATION MUST BE COMPLETED BEFORE THE NEXT STORM EVENT WHENEVER PRACTICAL. IF IMPLEMENTATION BEFORE THE NEXT STORM EVENT IS IMPRACTICABLE, THE SITUATION MUST BE DOCUMENTED IN THE SWPPP AND ALTERNATIVE BMPs MUST BE IMPLEMENTED AS SOON AS REASONABLY POSSIBLE.
23. A PRE-CONSTRUCTION CONFERENCE MUST BE HELD FOR EACH CONSTRUCTION SITE WITH AN APPROVED ON-SITE SWPPP PRIOR TO THE IMPLEMENTATION OF CONSTRUCTION ACTIVITIES. FOR NON-LINEAR PROJECTS THAT DISTURB 10 ACRES OR MORE THIS CONFERENCE MUST BE HELD ON-SITE UNLESS THE DEPARTMENT HAS APPROVED OTHERWISE.

PREDOMINANT SOIL TYPE

URBAN LAND Ur

GRASSING PER 1000 SQUARE FEET (TEMPORARY)

FROM MAY 1 TO AUGUST 30		FROM SEPTEMBER 1 TO APRIL 30	
1 LB.	BROWNTOP MILLET GRASS	6 LBS.	ANNUAL RYEGRASS
15 LBS.	10-10-10 FERTILIZER	15 LBS.	10-10-10 FERTILIZER
5 LBS.	MAGNESIUM SULFATE	5 LBS.	MAGNESIUM SULFATE
10 LBS.	CALCIUM (GYPSUM)	10 LBS.	CALCIUM (GYPSUM)

PERMANENT VEGETATION

SEE LANDSCAPE PLANS FOR PERMANENT VEGETATION.

MATERIALS

USE FILTER FABRIC THAT CONFORMS TO SCDOT STANDARD SPECIFICATIONS FOR HIGHWAY CONSTRUCTION (LATEST EDITION). REFER TO THE SILT FENCE GEOTEXTILE FABRICS APPROVAL SHEET #34.

USE STEEL POSTS THAT MEET THE FOLLOWING MINIMUM PHYSICAL REQUIREMENTS:
- BE COMPOSED OF HIGH STRENGTH STEEL WITH MINIMUM YIELD STRENGTH OF 50,000 PSI.
- HAVE A STANDARD "T" SECTION WITH A NOMINAL FACE WIDTH OF 1.38-INCHES AND NOMINAL "T" LENGTH OF 1.48-INCHES.
- WEIGH 1.25 POUNDS PER FOOT (± 8%).
- BE PAINTED WITH A WATER BASED BAKED ENAMEL PAINT.

ATTACH FABRIC TO METAL POSTS WITH HEAVY-DUTY PLASTIC TIES.

INSTALLATION

EXCAVATE A TRENCH 6-INCHES WIDE AND 6-INCHES DEEP AROUND THE OUTSIDE PERIMETER OF THE INLET UNLESS THE FABRIC IS PNEUMATICALLY INSTALLED.

EXTEND THE FILTER FABRIC A MINIMUM OF 12-INCHES INTO THE TRENCH. BACKFILL THE TRENCH WITH SOIL OR CRUSHED STONE AND COMPACT OVER THE FILTER FABRIC UNLESS THE FABRIC IS PNEUMATICALLY INSTALLED.

USE STEEL POSTS WITH A MINIMUM POST LENGTH OF 60-INCHES CONSISTING OF STANDARD "T" SECTIONS WITH A WEIGHT OF 1.25 POUNDS PER FOOT (±8%). INSTALL THE FILTER FABRIC TO A MINIMUM HEIGHT OF 24-INCHES ABOVE GRADE. SPACE THE STEEL POSTS AROUND THE PERIMETER OF THE INLET A MAXIMUM OF 3-FEET APART AND DRIVE THEM INTO THE GROUND A MINIMUM OF 24-INCHES. CUT THE FILTER FABRIC FROM A CONTINUOUS ROLL TO THE LENGTH OF THE PROTECTED AREA TO AVOID THE USE OF JOINTS. WHEN JOINTS ARE NECESSARY, WRAP FILTER FABRIC TOGETHER ONLY AT A SUPPORT POST WITH BOTH ENDS SECURELY FASTENED TO THE POST, WITH A MINIMUM 6-INCH OVERLAP.

ATTACH FABRIC TO STEEL POSTS WITH HEAVY-DUTY PLASTIC TIES.

ATTACH AT LEAST FOUR (4) EVENLY SPACED TIES IN A MANNER TO PREVENT SAGGING OR TEARING OF THE FABRIC. IN ALL CASES, AFFIX TIES IN NO LESS THAN FOUR (4) PLACES.

INSPECTION AND MAINTENANCE

ALL SEDIMENT AND EROSION CONTROL DEVICES SHALL BE INSPECTED AT LEAST ONCE EVERY FOURTEEN (14) CALENDAR DAYS AND WITHIN 24 HOURS OF THE END OF A STORM EVENT OF 0.5 INCHES OR GREATER. IF THE FABRIC BECOMES CLOGGED, IT SHOULD BE REPLACED. SEDIMENT SHOULD BE REMOVED WHEN IT REACHES APPROXIMATELY 1/3 THE HEIGHT OF THE FENCE. TAKE CARE NOT TO DAMAGE OR UNDERCUT FABRIC WHEN REMOVING SEDIMENT. IF A SUMP IS USED, SEDIMENT SHOULD BE REMOVED WHEN IT FILLS APPROXIMATELY 1/3 THE DEPTH OF THE HOLE. MAINTAIN THE POOL AREA, ALWAYS PROVIDING ADEQUATE SEDIMENT STORAGE VOLUME FOR THE NEXT STORM.

STORM DRAIN INLET PROTECTION STRUCTURES SHOULD BE REMOVED ONLY AFTER THE DISTURBED AREAS ARE PERMANENTLY STABILIZED. REMOVE ALL CONSTRUCTION MATERIAL AND SEDIMENT, AND DISPOSE OF THEM PROPERLY. GRADE THE DISTURBED AREA TO THE ELEVATION OF THE DROP INLET STRUCTURE CREST. USE APPROPRIATE PERMANENT STABILIZATION METHODS TO STABILIZE BARE AREAS AROUND THE INLET.

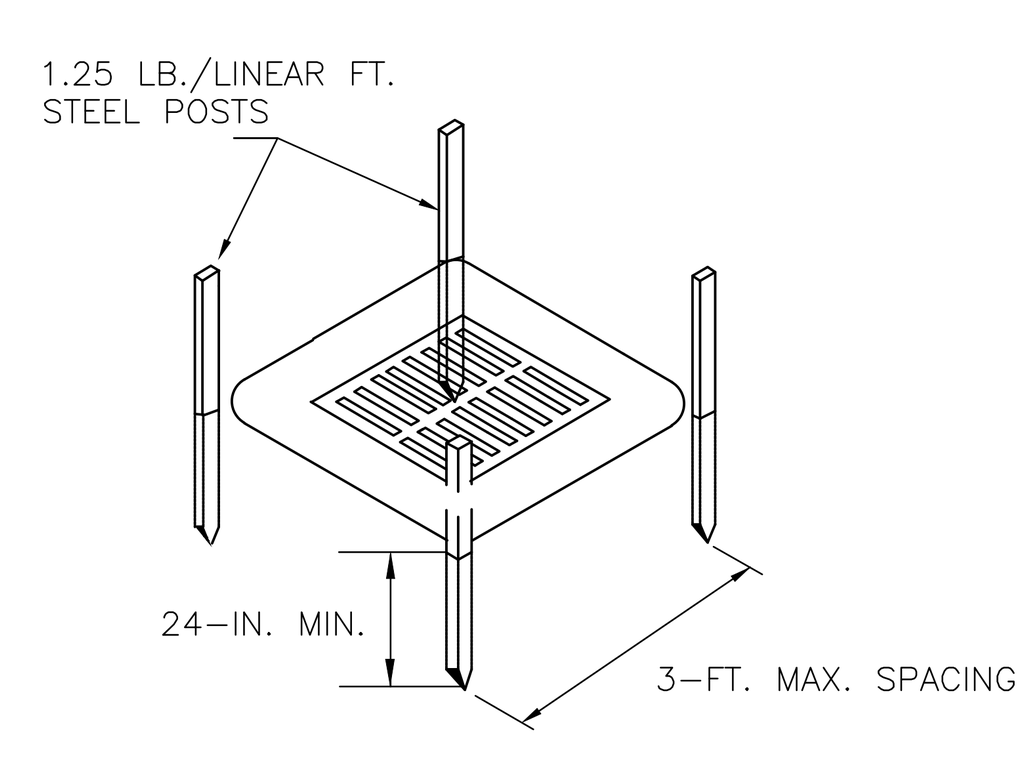

POST INSTALLATION DETAIL

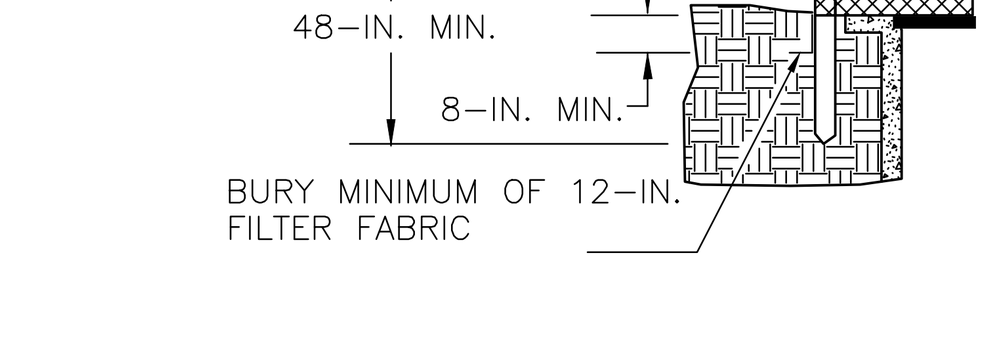

FILTER FABRIC BURIAL DETAIL

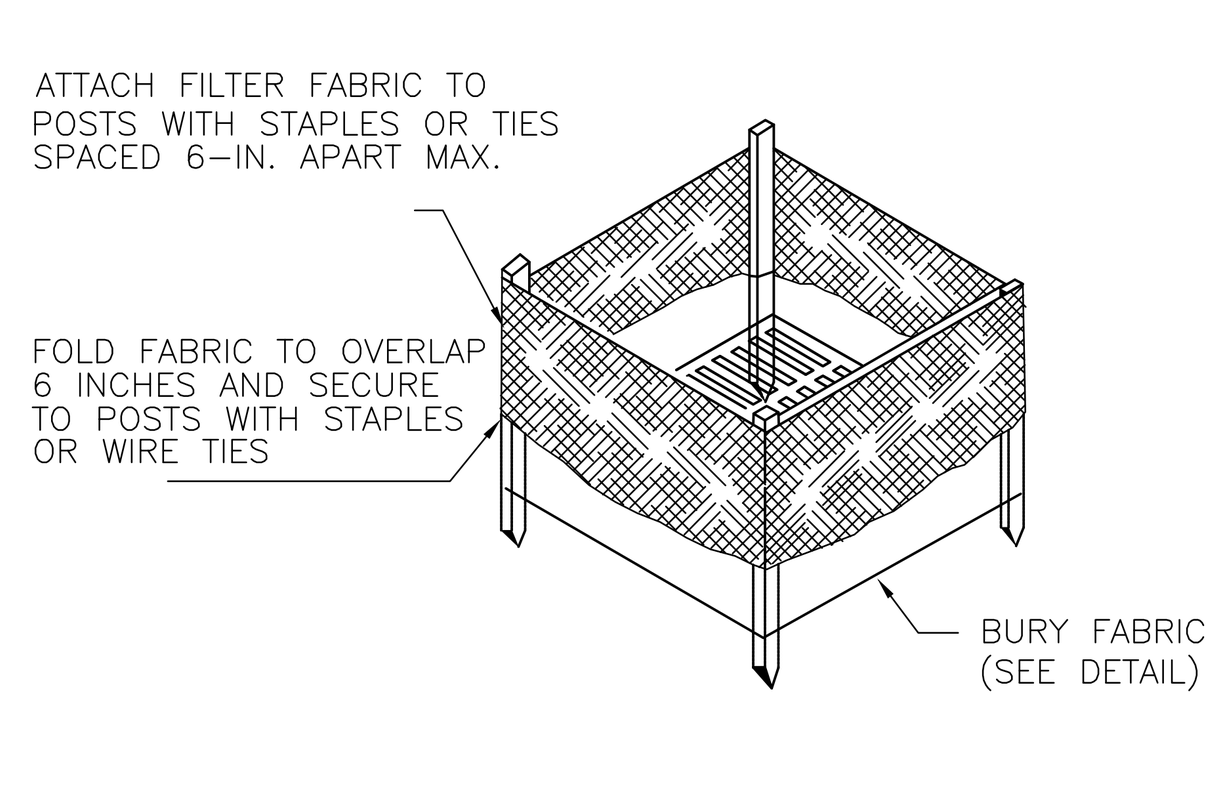

FILTER FABRIC INSTALLATION DETAIL

TYPE A - FILTER FABIC INLET PROTECTION

NOT TO SCALE

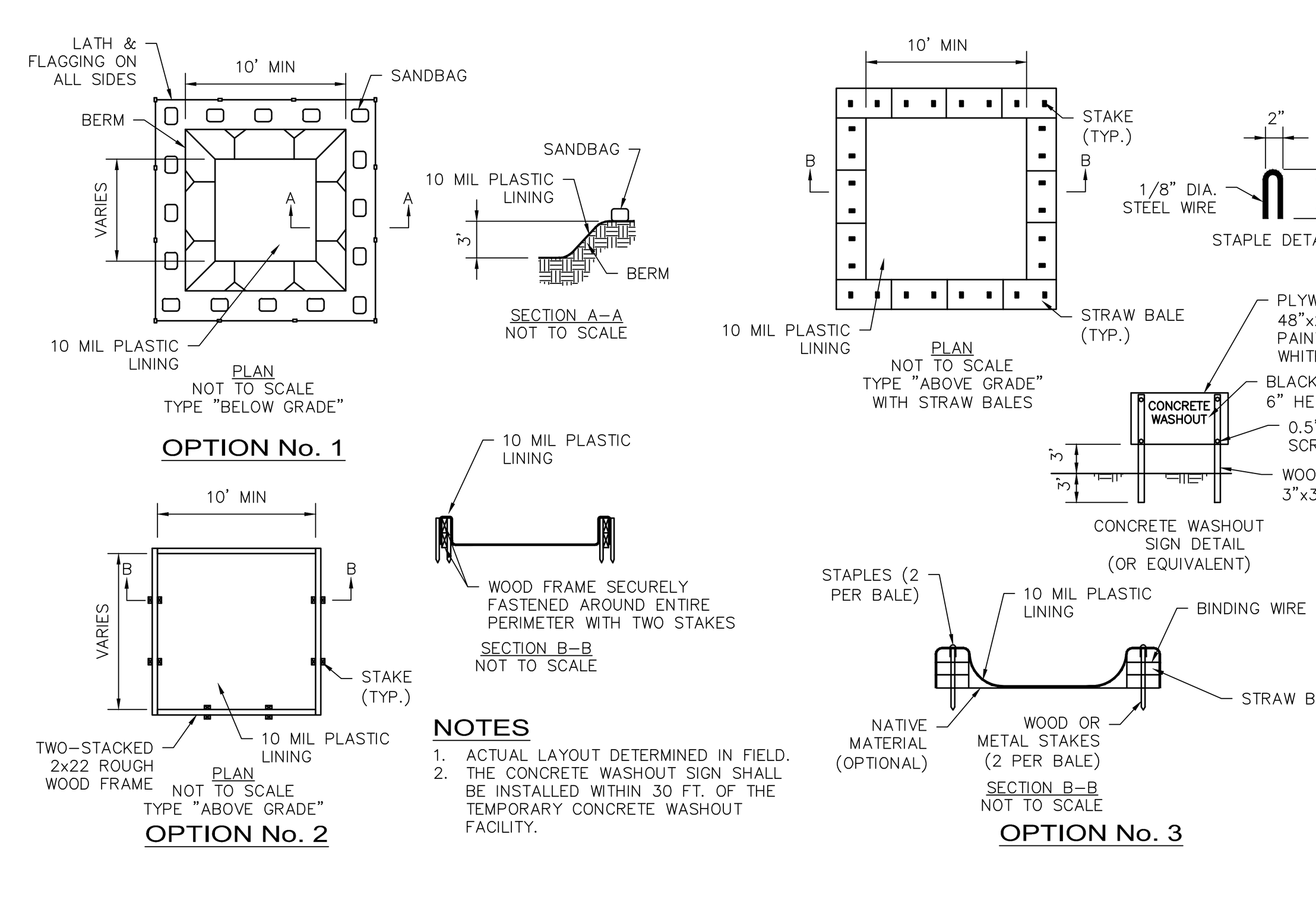

NOTES
1. ACTUAL LAYOUT DETERMINED IN FIELD.
2. THE CONCRETE WASHOUT SIGN SHALL BE INSTALLED WITHIN 30 FT. OF THE TEMPORARY CONCRETE WASHOUT FACILITY.

CONCRETE WASHOUT

The Boudreaux Group
The Boudreaux Group, Inc.
1330 Lady St., Suite 500 (29201)
P.O. Box 5695
Columbia, SC 29250
803 799 0247 p
803 771 6844 f
info@boudreauxgroup.com
Interdisciplinary Design Architecture Interiors Planning

A/E Seal: SOUTH CAROLINA — RB TODD & ASSOCIATES, INC. NO. C03047 — CERTIFICATE OF AUTHORIZATION

A/E Seal: SOUTH CAROLINA REGISTERED PROFESSIONAL ENGINEER NO. 15310 ROBERT BRUCE TODD — 10/01/14

Project Title: UNIVERSITY OF SOUTH CAROLINA SCHOOL OF JOURNALISM BROADCAST STUDIO

CONSTRUCTION DOCUMENTS

COLUMBIA, SOUTH CAROLINA

Project No. U-646-12-3

Drawn By

Checked By

Date 10.01.14

This drawing and the design thereon are the property of The Boudreaux Group, Inc. The reproduction, copying, or use of this drawing without the written consent of The Boudreaux Group, inc. is prohibited and any infringement will be subject to legal action. Copyright © 2001 The Boudreaux Group

Revisions No.	Name	Date

Drawing Title: SEDIMENT AND EROSION CONTROL PLAN, NOTES AND DETAILS

Drawing No. C4.0

Oct 28, 2014 – 8:56am S:\Projects\13224 USC Broadcast Studio\Drawings\Civil\141027\13224 USC Broadcast Studio.dwg.

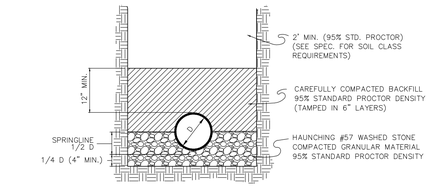

1 C5.0 SANITARY SEWER LINE BEDDING

NO SCALE

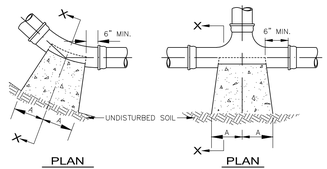

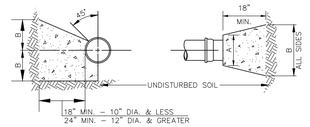

TYPE	PIPE SIZE	90° BEND A	90° BEND B	45° BEND A	45° BEND B	22-1/2° BEND A	22-1/2° BEND B	TEE A	TEE B	PLUG A	PLUG B
TYPE I 4000 PSF SOIL	6"	8"	10"	6"	8"	3"	8"	8"	8"	10"	15"
	8"	12"	12"	8"	10"	5"	9"	12"	12"	20"	
	10"	16"	14"	10"	12"	6"	10"	11"	14"	14"	23"
	12"	19"	16"	12"	14"	8"	11"	14"	16"	16"	32"
	14"	23"	18"	14"	16"	10"	12"	16"	18"	18"	34"
	16"	26"	20"	16"	18"	11"	13"	18"	20"	20"	38"
TYPE II 2000 PSF SOIL	6"	16"	10"	9"	10"	6"	8"	10"	12"	10"	21"
	8"	22"	13"	12"	13"	8"	10"	13"	16"	12"	29"
	10"	26"	17"	14"	17"	10"	13"	16"	20"	14"	36"
	12"	29"	21"	16"	21"	11"	16"	18"	24"	16"	41"
	14"	35"	24"	19"	24"	12"	20"	22"	27"	18"	48"
	16"	38"	27"	21"	27"	12"	24"	24"	30"	20"	54"

NOTE: TABLE BASED ON 100psi STATIC PRESSURE PLUS AWWA WATER HAMMER. ALL BEARING SURFACES TO BE CARRIED TO UNDISTURBED GROUND.

5 C5.0 WATER MAIN THRUST BLOCKS

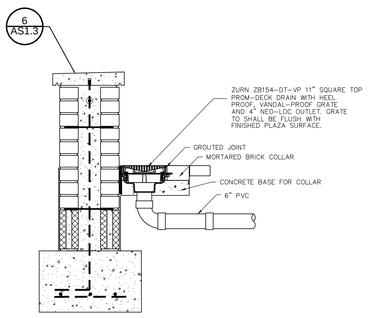

2 C5.0 SECTION

NOT TO SCALE

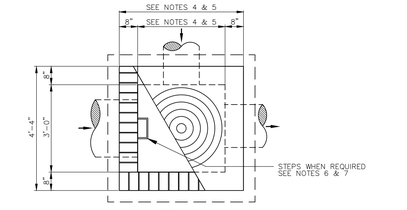

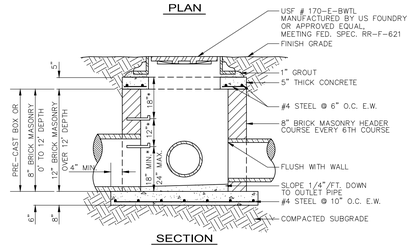

NOTES * SEE NOTES 6 & 7

1. ALL CONCRETE SHALL BE 3,000 PSI.
2. ENDS OF ALL PIPES SHALL BE FLUSH WITH INSIDE WALL.
3. ALL STEEL BARS SHALL BE PLACED 1-1/2" CLEAR FROM BOTTOM AND SIDES OF SLAB.
4. FOR 15" – 24" I.D. PIPES USE 3'-0" x 3'-0" BOX.
5. FOR PIPES OVER 24" I.D. BOX INSIDE DIMENSIONS SHALL BE PIPE O.D. + 6" EACH SIDE OF PIPE.
6. STEPS CONFORMING TO ASTM C478 SHALL BE REQUIRED WHEN STRUCTURE DEPTH IS GREATER THAN 4'-6".
7. ALL STEPS SHALL BE PLACED 12" O/C AND PROTRUDE 4" FROM INSIDE FACE OF STRUCTURE WALL.
8. CONCRETE BRICK WALLS SHALL HAVE A 1/4" MORTAR COAT ON INSIDE SURFACE.
9. WALL THICKNESS IS TO BE 12" IF BOX DEPTH EXCEEDS 12'-0".
10. ALL MATERIALS AND CONSTRUCTION ARE TO COMPLY WITH SECTION 720 OF THE SCDOT STANDARD SPECIFICATIONS FOR HIGHWAY CONSTRUCTION.
11. REINFORCED CONCRETE MAY BE SUBSTITUTED FOR BRICK WALLS. REINFORCING TO BE #4 BARS @ 12" E.W.

8 C5.0 JUNCTION BOX

NOT TO SCALE

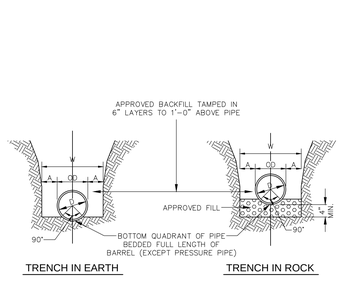

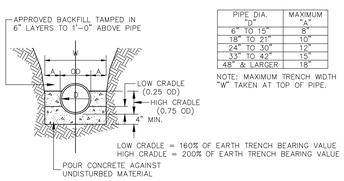

PIPE DIA. "D"	MAXIMUM "A"
6" TO 15"	8"
18" TO 21"	10"
24" TO 30"	12"
36" TO 42"	15"
48" & LARGER	18"

NOTE: MAXIMUM TRENCH WIDTH "W" TAKEN AT TOP OF PIPE.

3 C5.0 STANDARD PIPE TRENCH BEDDING

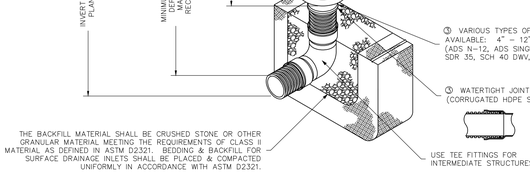

NOTES

1. GRATES/SOLID COVERS SHALL BE DUCTILE IRON PER ASTM A536 GRADE 70-50-05
2. FRAMES SHALL BE DUCTILE IRON PER ASTM A536 GRADE 70-50-05.
3. DRAINAGE CONNECTION STUB JOINT TIGHTNESS SHALL CONFORM TO ASTM D3212 FOR CORRUGATED HDPE (ADS & HANCOR DUAL WALL) & SDR 35 PVC.

6 C5.0 8" AND 12" INLINE DRAIN

NOT TO SCALE

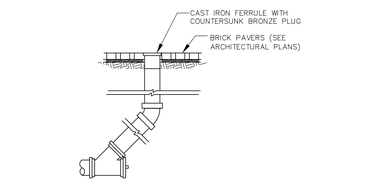

4 C5.0 GRADE CLEANOUT WITH COUNTERSUNK BRONZE PLUG

NOT TO SCALE

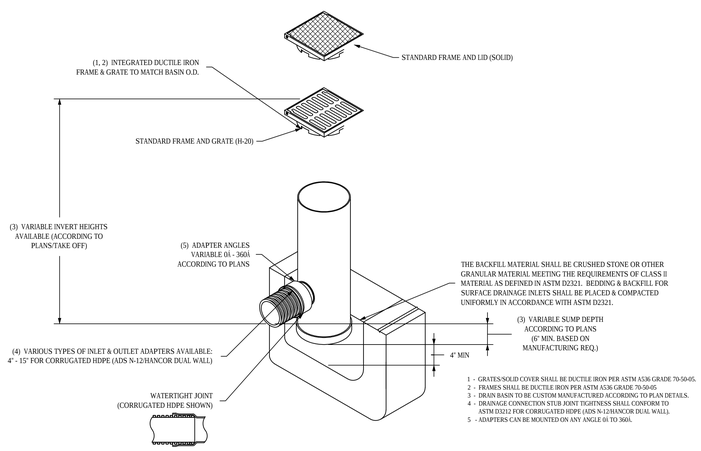

1 - GRATES/SOLID COVER SHALL BE DUCTILE IRON PER ASTM A536 GRADE 70-50-05.
2 - FRAMES SHALL BE DUCTILE IRON PER ASTM A536 GRADE 70-50-05
3 - DRAIN BASIN TO BE CUSTOM MANUFACTURED ACCORDING TO PLAN DETAILS.
4 - DRAINAGE CONNECTION STUB JOINT TIGHTNESS SHALL CONFORM TO ASTM D3212 FOR CORRUGATED HDPE (ADS N-12/HANCOR DUAL WALL).
5 - ADAPTERS CAN BE MOUNTED ON ANY ANGLE 0ß TO 360ß.

7 C5.0 NYLOPLAST 12" DRAIN BASIN

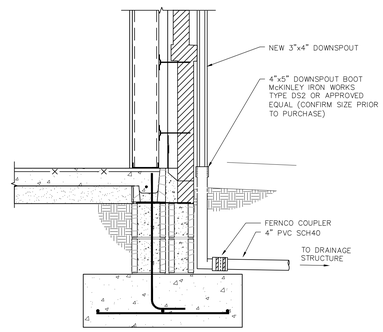

9 C5.0 DOWNSPOUT CONNECTION

RB TODD CONSULTING ENGINEERS
7436 Broad River Road, Suite 212
Irmo, SC 29063
Tel. 803.781.3141
Fax. 803.781.3142
www.rbtodd.com

The Boudreaux Group
The Boudreaux Group, Inc.
1230 Lady St., Suite 300 (29201)
P.O. Box 7566
Columbia, SC 29250
803 799 0247 P
803 771 4844 F
info@boudreauxgroup.com
Interdisciplinary Design Architecture Interiors Planning

SOUTH CAROLINA RB TODD & ASSOCIATES, INC. NO. C03047 CERTIFICATE OF AUTHORIZATION
A/E Seal

SOUTH CAROLINA PROFESSIONAL ENGINEER NO. 11910 BRUCE
A/E Seal
10/01/14

Project Title
UNIVERSITY OF SOUTH CAROLINA
SCHOOL OF JOURNALISM
BROADCAST STUDIO

CONSTRUCTION DOCUMENTS

COLUMBIA, SOUTH CAROLINA

Project No. U-646-12-3
Drawn By
Checked By
Date 10.01.14

This drawing and the design thereon are the property of The Boudreaux Group, Inc. The reproduction, copying or other use of this drawing without the written consent of The Boudreaux Group, Inc. is prohibited. Any unauthorized use to be legal responsibility of the user.
© The Boudreaux Group

Revisions No.	Name	Date

Drawing Title
DETAILS

Drawing No.
C5.0

Oct 07, 2014 – 10:27am S:\Projects\13224 USC Broadcast Studio\Drawings\Civil\141006\13224 USC Broadcast Studio.dwg

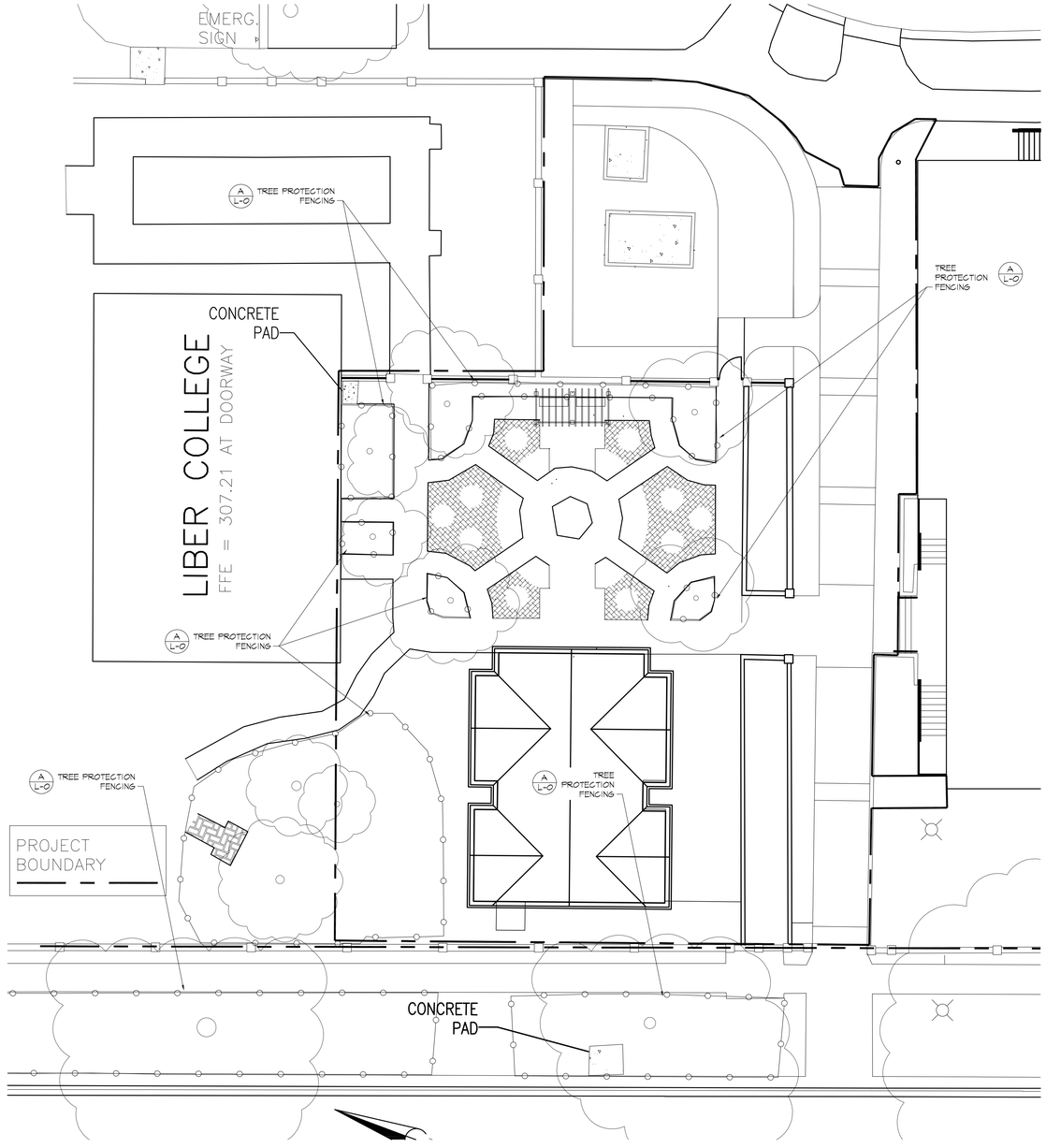

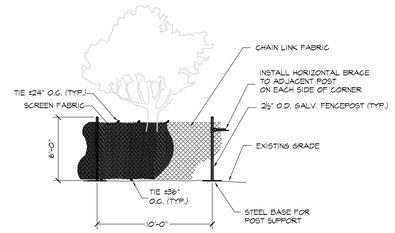

NOTES:
1. SEE LANDSCAPE PLANS FOR LOCATION OF TREE PROTECTION FENCING.
2. PROVIDE PROTECTION FENCE FOR ALL TREES TO REMAIN.
3. PROTECTION FENCING TO BE PLACED OUTSIDE OF DRIPLINE OF TREE CANOPY UNLESS OTHERWISE INDICATED ON LANDSCAPE PLAN OR APPROVED BY PROJECT MANAGER.
4. A 4" LAYER OF HARDWOOD MULCH SHALL BE PLACED OVER TREE PROTECTION AREA.
5. PROTECTION FENCING SHALL BE IN PLACE AND HARDWOOD MULCH PLACED PRIOR TO BEGINNING CONSTRUCTION.
6. REQUESTS FOR PAYMENT SHALL NOT BE APPROVED UNTIL PROTECTION FENCING AND MULCH IS IN PLACE.
7. LOCATION OF THE PROTECTION FENCING SHALL BE MARKED BY ARBORIST AND APPROVED BY PROJECT MANAGER BEFORE INSTALLATION. WHERE CONSTRUCTION IS LIKELY TO OCCUR WITHIN 5' OF PROPOSED LOCATION OF PROTECTION FENCING, CONTRACTOR SHALL HAVE LIMITS OF CONSTRUCTION MARKED BY SURVEY BEFORE PROTECTION FENCING IS INSTALLED.
8. SCREEN FABRIC SHALL BE DARK GREEN 85% OPAQUE, POLYETHEYLENE KNIT MESH, UV STABILIZED WITH BURST STRENGTH OF AT LEAST 210 P.S.I.

NOTE:
THE FOLLOWING FENCING SPEC MAY ALSO BE USED FOR TREE PROTECTION FENCING:
- PORTABLE CHAIN-LINK FENCING: MIN. 2", 0.148" THICK, GALVANIZED STEEL, CHAIN-LINK FABRIC FENCING: MIN. 8' HIGH WITH GALVANIZED STEEL PIPE POSTS: MIN. 2⅜" O.D. LINE POSTS AND 2⅞" O.D. CORNER AND PULL POSTS, WITH 1⅝" O.D. TOP AND BOTTOM RAILS. PROVIDE GALVANIZED STEEL BASES FOR SUPPORTING POSTS.

A / L-0 TREE PROTECTION FENCING

NOT TO SCALE

GRAPHIC SCALE 1" = 10'-0"

0' 5' 10' 20' 30'

The Boudreaux Group

The Boudreaux Group, Inc.
1330 Lady St., Suite 500 (29201)
P.O. Box 5605
Columbia, SC 29250
803 799 0247 p
803 771 6844 f
info@boudreauxgroup.com

Interdisciplinary Design Architecture Interiors Planning

A/E Seal

SOUTH CAROLINA GRIMBALL COTTERILL & ASSOCIATES No.049 CERTIFICATE OF AUTHORIZATION

A/E Seal

STATE OF SOUTH CAROLINA REGISTERED LANDSCAPE ARCHITECT No. 470 L. MARK COTTERILL

Project Title

UNIVERSITY OF SOUTH CAROLINA
SCHOOL OF JOURNALISM
BROADCAST STUDIO

BID DOCUMENTS

COLUMBIA, SOUTH CAROLINA

Project No. U-646-12-3
Drawn By SKC
Checked By TMC
Date 10.31.14

This drawing and the design therein are the property of The Boudreaux Group, Inc. The reproduction, copying, or use of this drawing without the written consent of The Boudreaux Group, Inc. is prohibited and any infringement will be subject to legal action. Copyright © 2001 The Boudreaux Group

Revisions

No.	Name	Date

Drawing Title

TREE PROTECTION PLAN

Drawing No.

L-0

Nov 03, 2014 – 9:10am \\Palmetto\grimcott\Active Projects on Maple\T-Z Projects\USC Broadcast\CDBase.dwg.

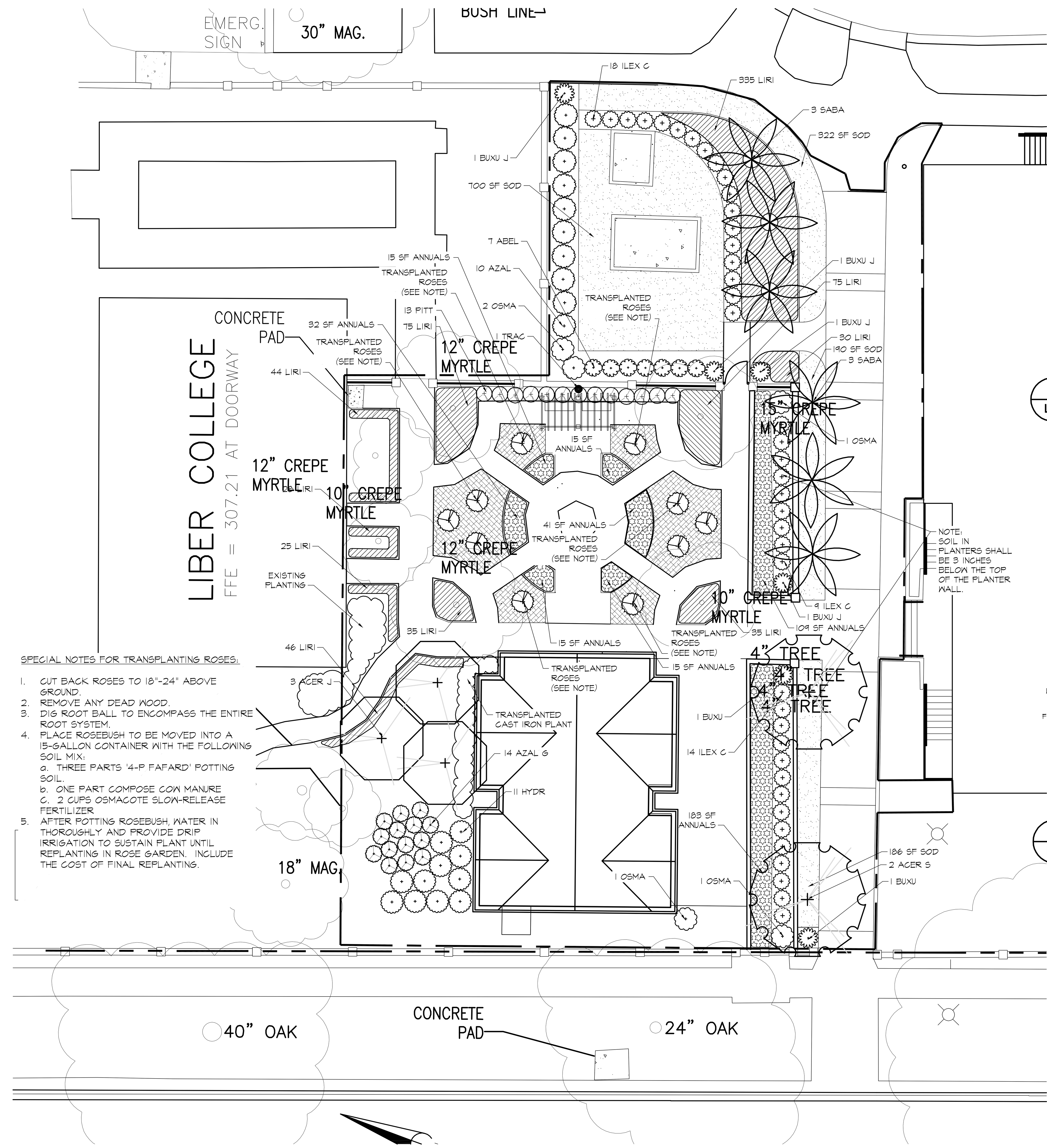

SPECIAL NOTES FOR TRANSPLANTING ROSES:

1. CUT BACK ROSES TO 18"-24" ABOVE GROUND.
2. REMOVE ANY DEAD WOOD.
3. DIG ROOT BALL TO ENCOMPASS THE ENTIRE ROOT SYSTEM.
4. PLACE ROSEBUSH TO BE MOVED INTO A 15-GALLON CONTAINER WITH THE FOLLOWING SOIL MIX:
   a. THREE PARTS '4-P FAFARD' POTTING SOIL.
   b. ONE PART COMPOSE COW MANURE
   c. 2 CUPS OSMACOTE SLOW-RELEASE FERTILIZER
5. AFTER POTTING ROSEBUSH, WATER IN THOROUGHLY AND PROVIDE DRIP IRRIGATION TO SUSTAIN PLANT UNTIL REPLANTING IN ROSE GARDEN. INCLUDE THE COST OF FINAL REPLANTING.

PLANT LIST

ABBR.	BOTANICAL NAME	COMMON NAME	MINIMUM CALIPER	SPREAD	HEIGHT	BALL DIA.	NO. CANES	COMMENTS	QTY.
ACER J	ACER PALMATUM	JAPANESE MAPLE	2"	4'	8'	24"	1	SPECIMEN	3
ACER S	ACER SACCHARUM	SUGAR MAPLE	4"	7'	16'-18'	42"	1	SPECIMEN	2
SABA	SABAL PALMETTO	PALMETTO			10'-12'		1	SPECIMEN	6
ABEL	ABELIA X GRANDIFLORA 'ROSE CREEK'	'ROSE CREEK' ABELIA		15"	12"	3 GAL.	3-5	PLANT 3' O.C.	7
AZAL	AZALEA INDICA	INDICA AZALEA		24"	24"	3 GAL.	3-5	PLANT 4' O.C.	10
AZAL G	AZALEA HYBRIDA 'GUMPO PINK'	'GUMPO PINK' SATSUKI HYBRID AZALEA		15"	15"	3 GAL.	3-5	PLANT 3' O.C.	14
BUXU J	BUXUS MICROPHYLLA JAPONICUM	JAPANESE BOXWOOD		24"	24"	3 GAL.	3-5	PLANT AS SHOWN	6
HYDR	HYDRANGEA QUERCIFOLIA	OAKLEAF HYDRANGEA		24"	24"	3 GAL.	3-5	PLANT AS SHOWN	11
ILEX C	ILEX CORNUTA 'CARISSA'	CARISSA HOLLY		15"-18"	12"	3 GAL.	3-5	PLANT 3' O.C.	41
OSMA	OSMANTHUS FRAGRANS	FRAGRANT TEA OLIVE		24"	24"	3 GAL.	3-5	PLANT 4' O.C.	5
PITT	PITTOSPORUM TOBIRA 'WHEELER'S DWARF'	DWARF PITTOSPORUM		15"	12"	3 GAL.	3-5	PLANT 3' O.C.	13
ANNUALS	ANNUAL FLOWERS	(VARIETY TO BE SELECTED)							425 SF
LIRI	LIRIOPE MUSCARII 'BIG BLUE'	'BIG BLUE' LIRIOPE				PINT		PLANT 12" O.C.	728
TRAC	TRACHELOSPERMUM JASMINOIDES	CONFEDERATE JASMINE				PINT	5-7	TRAIN TO WALL	1
SOD	EREMOCHLOA OPHIUROIDES	CENTIPEDE GRASS						WELL ROOTED	1208 SF

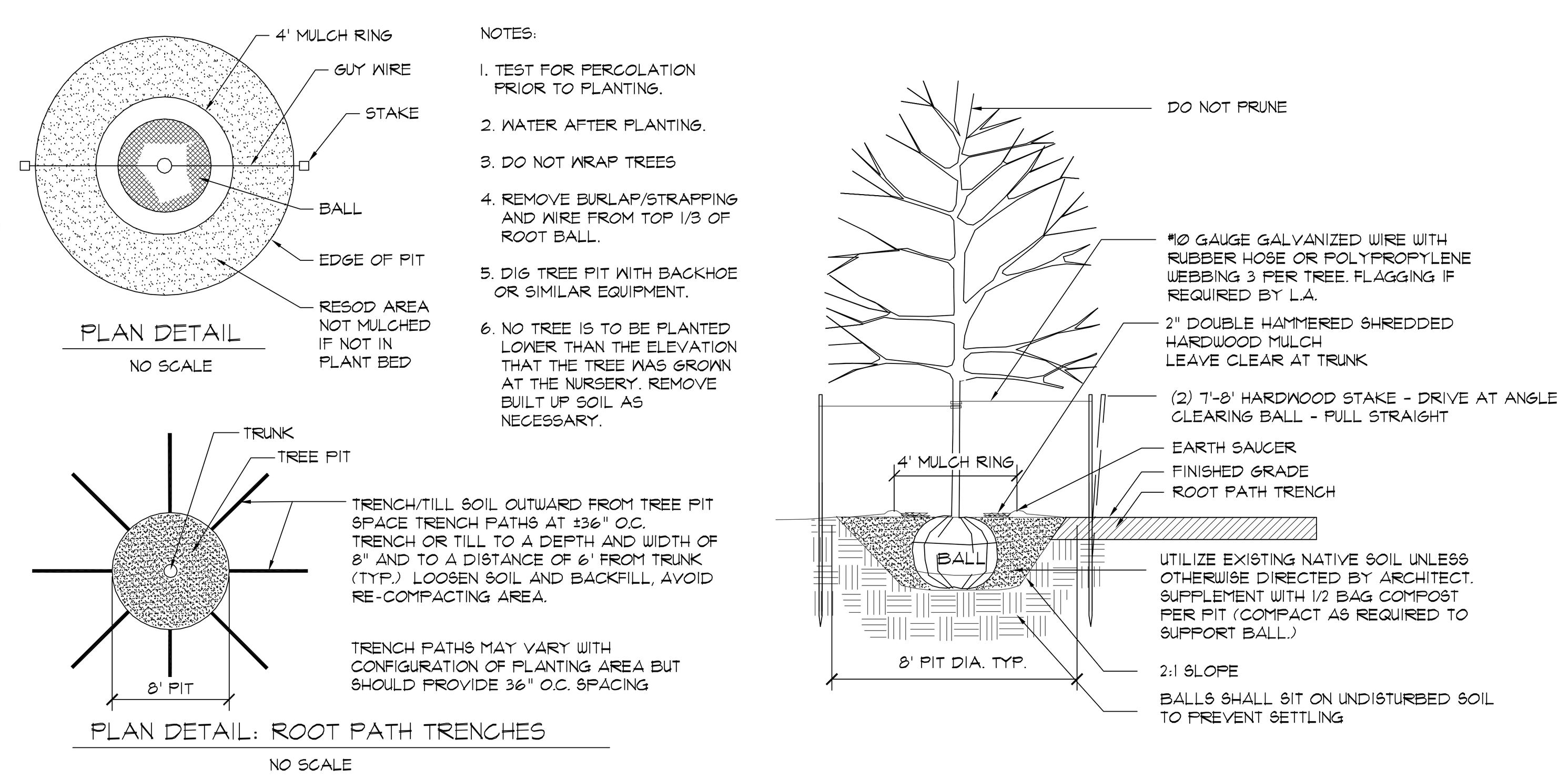

A / L-1 **TREE PLANTING AND STAKING**

SECTION — NOT TO SCALE

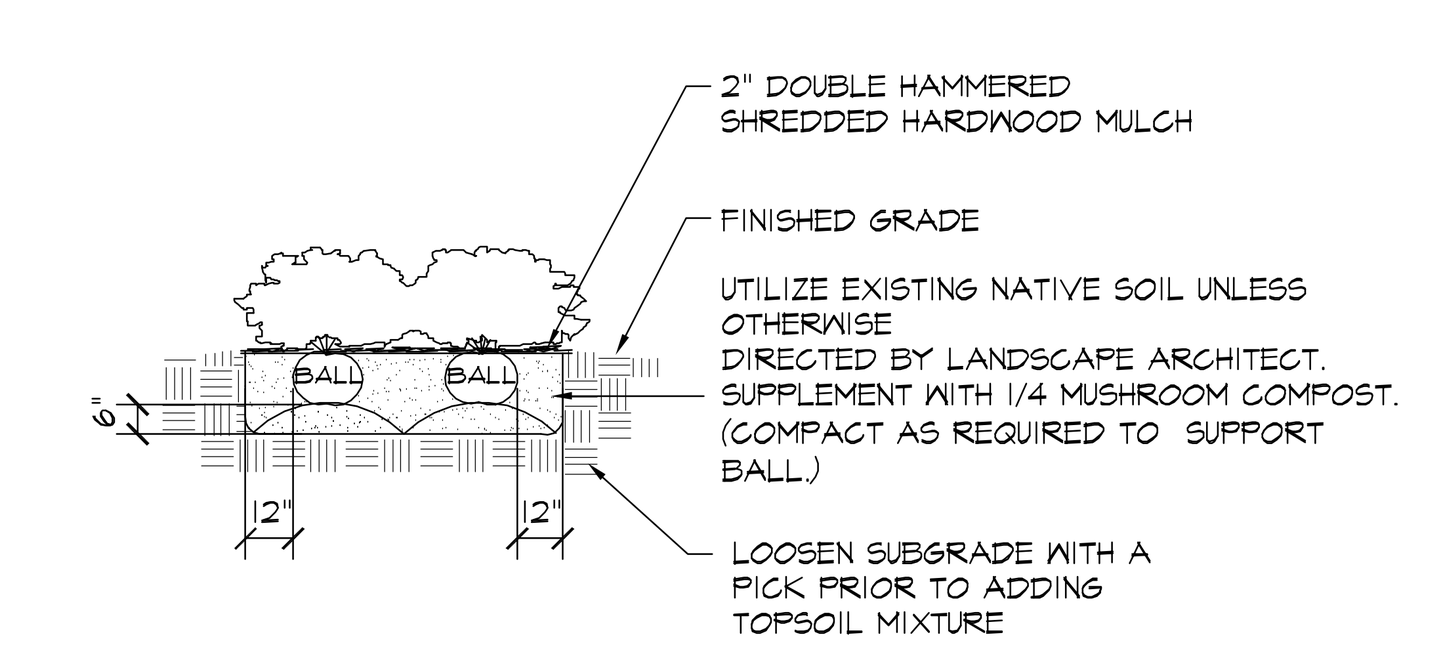

NOTES:
1. TEST FOR PERCOLATION PRIOR TO PLANTING.
2. REMOVE PAPER, PLASTIC OR METAL CONTAINER THAT MAY BE AROUND ROOTS
3. WATER AFTER PLANTING
4. DO BED PREPARATION ON ALL SHRUB & GROUNDCOVER AREAS

B / L-1 **SHRUB PLANTING**

NOT TO SCALE

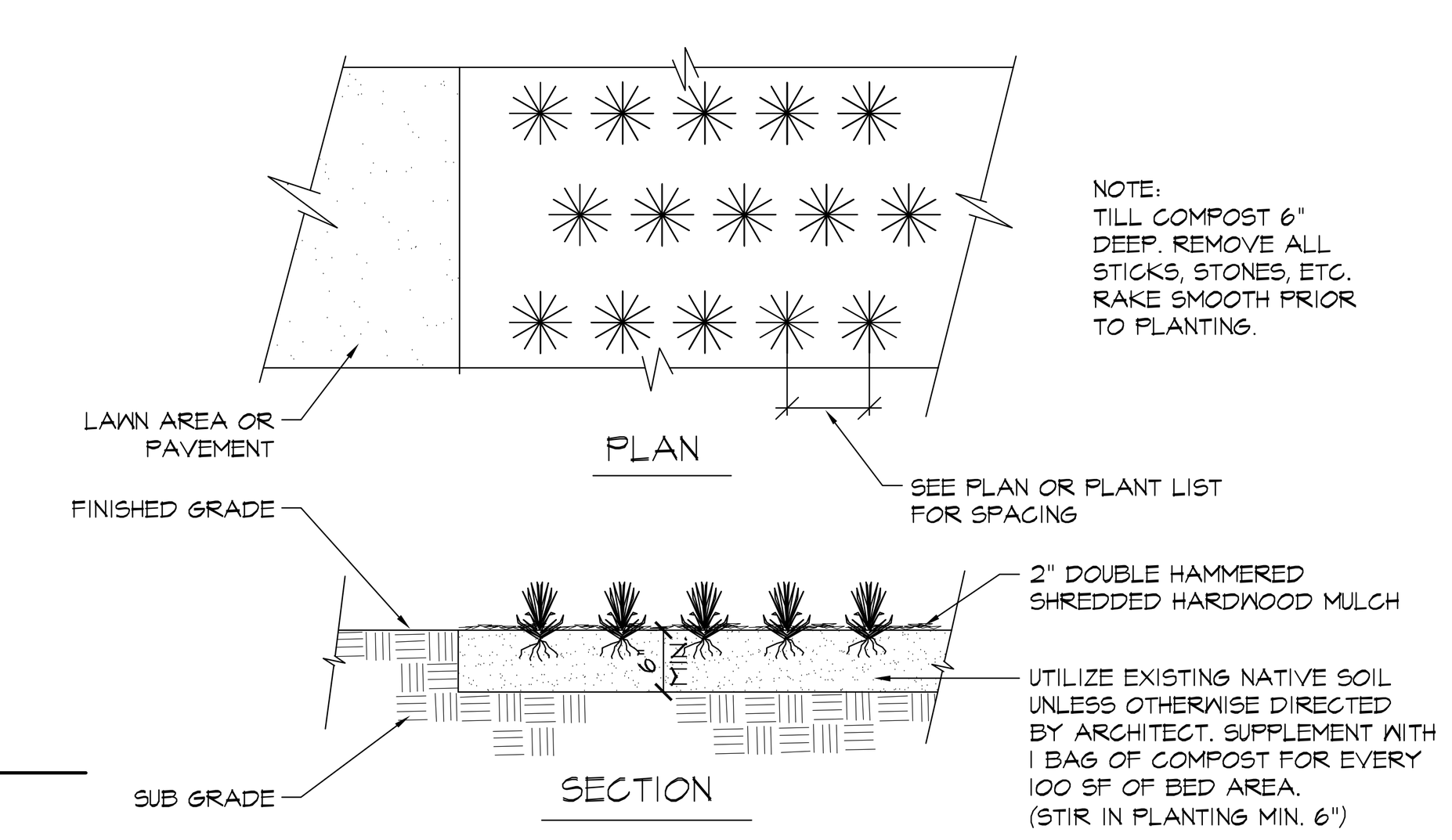

C / L-1 **TYPICAL GROUNDCOVER PLANTING**

NOT TO SCALE

INSTRUCTIONS FOR PERFORMING A PERCOLATION TEST

1. WITH A SHOVEL OR POSTHOLE DIGGER, DIG HOLE 18" TO 24" DEEP. HOLE DIAMETER SHOULD BE A MINIMUM OF 4 INCHES. THE DIAMETER OF THE HOLE SHOULD BE UNIFORM FROM TOP TO BOTTOM WITH THE BOTTOM BEING FLAT.

2. FILL HOLE WITH WATER TO THE TOP AND LET STAND FOR AT LEAST AN HOUR TO PRE-WET THE SOIL.

3. REFILL HOLE TO WITHIN A COUPLE INCHES OF THE TOP. DON'T OVERFLOW THE HOLE.

4. TO AID IN MEASUREMENT, PLACE A STICK ACROSS THE TOP OF THE HOLE AND USE A RULER OR MEASURING TAPE TO MARK PERIODIC DROPS IN WATER LEVEL.

5. ALLOW THE HOLE TO DRAIN FOR AT LEAST ONE HOUR. A LONGER PERIOD OF TIME (2 TO 3 HOURS) WILL GIVE A MORE ACCURATE READING OF AVERAGE PERCOLATION RATES.

6. DETERMINE AVERAGE DROP IN WATER LEVEL PER HOUR AND REFER TO THE TABLE BELOW TO INTERPRET RESULTS.

HOW TO INTERPRET RESULTS	
IF WATER LEVEL IN HOLE DROPS...	SITE IS...
LESS THAN ONE-HALF INCH PER HOUR	POORLY DRAINED AND SUITED TO WET -SITE SPECIES
ONE HALF-INCH TO ONE INCH PER HOUR	MODERATELY WELL DRAINED AND ACCEPTABLE FOR MANY SPECIES INCLUDING WET SITE SPECIES
MORE THAN ONE INCH PER HOUR	WELL DRAINED AND SUITABLE FOR ALL SPECIES INCLUDING SENSITIVE SPECIES

PERCOLATION TEST HOLE

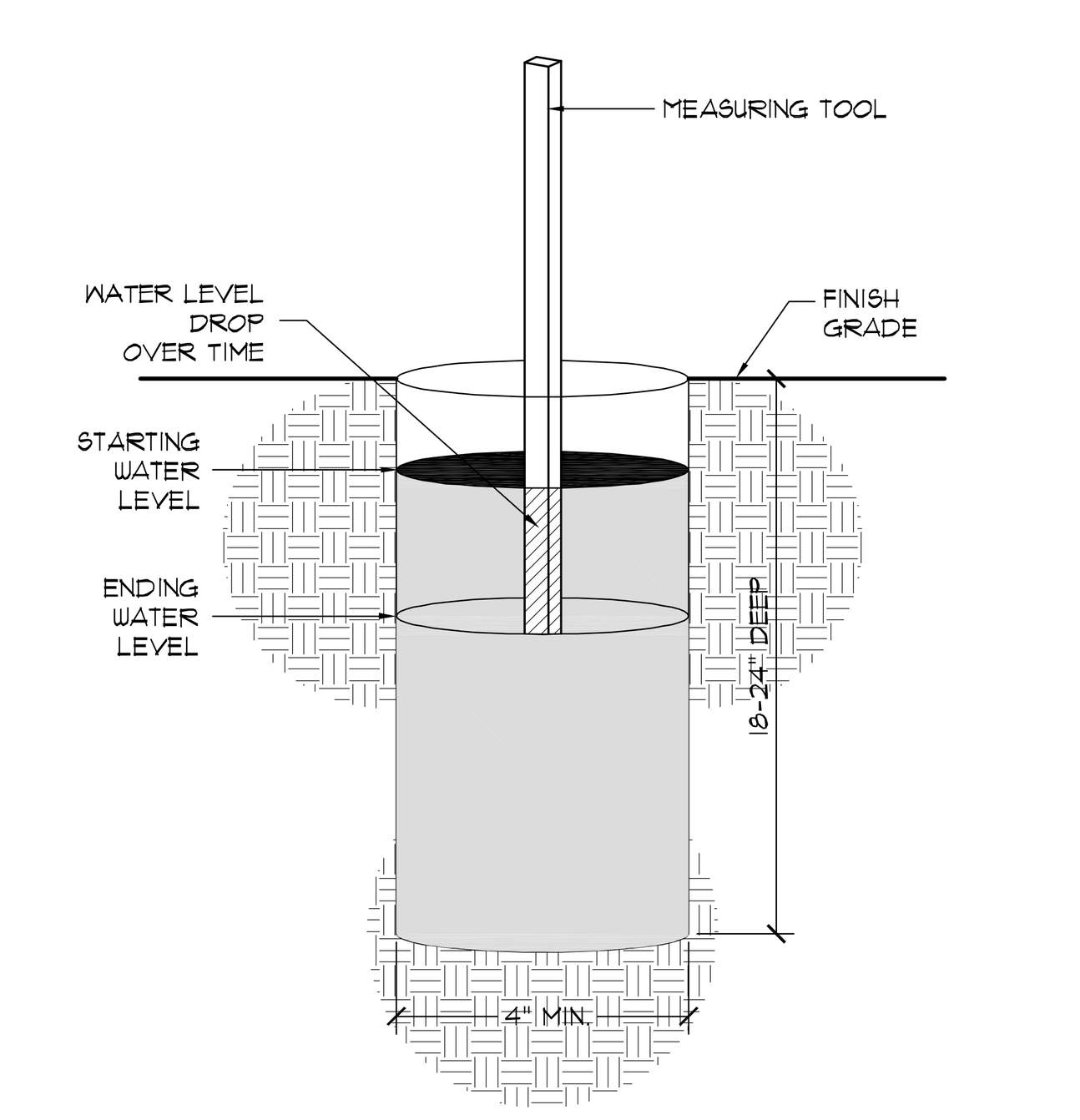

D / L-1 **PERCOLATION TEST**

ISOMETRIC — NOT TO SCALE

PLANTING NOTES

1. PLANTS LABELED NIC ARE NOT IN CONTRACT AND ARE NOT A PART OF THIS PHASE OF WORK.

2. REQUIREMENTS FOR THE MEASUREMENTS, BRANCHING, GRADING, QUALITY, BALLING AND BURLAPPING OF PLANTS IN THE PLANT LIST GENERALLY FOLLOWS OR EXCEEDS A CODE OF STANDARDS CURRENTLY RECOMMENDED BY THE AMERICAN ASSOCIATION OF NURSERYMEN, INC. IN THE AMERICAN STANDARD FOR NURSERY STOCKS. SEE THE PLANT LIST FOR MORE RESTRICTIVE REQUIREMENTS.

3. ALL PLANTS SHALL HAVE A WELL FORMED HEAD WITH MINIMUM CALIPER, HEIGHT AND SPREAD OF THE SIDE BRANCHES AS SHOWN ON THE PLANT LIST. TRUNKS SHALL BE UNDAMAGED AND SHAPE SHALL BE TYPICAL OF THE SPECIES.

4. MEASUREMENT OF CONIFER HEIGHT SHALL INCLUDE NOT MORE THAN FIFTY (50) PER CENT OF THIS YEARS' VERTICAL GROWTH (TOP CANDLE).

5. THE LANDSCAPE CONTRACTOR IS HEREBY NOTIFIED OF THE EXISTENCE OF UNDERGROUND UTILITIES WITHIN THE LIMITS OF THE PROJECT AREA. THE CONTRACTOR SHOULD VERIFY THE EXACT LOCATION OF ALL UTILITY LINES PRIOR TO COMMENCEMENT OF DIGGING OPERATIONS.

6. THE CONTRACTOR WILL BE RESPONSIBLE FOR STAKING AND LAYOUT OF PLANTINGS ON THIS PROJECT. THE LANDSCAPE ARCHITECT OR OWNER SHALL BE ADVISED WHEN STAKES ARE READY FOR INSPECTION ON VARIOUS PLANTING AREAS. ALL LAYOUT WORK SHALL BE INSPECTED AND APPROVED BY THE LANDSCAPE ARCHITECT AND OWNER PRIOR TO OPENING ANY PLANTING PITS.

7. IT IS THE RESPONSIBILITY OF THE LANDSCAPE CONTRACTOR TO VERIFY THAT EACH EXCAVATED TREE OR SHRUB PIT WILL PERCOLATE (DRAIN) PRIOR TO ADDING TOPSOIL AND INSTALLING TREES OR SHRUBS. THE CONTRACTOR SHALL DO PERCOLATION TEST AS DETAILED ON DETAIL D/L-1. THE OWNER OR LANDSCAPE ARCHITECT SHALL VERIFY ACCURACY AND EFFECT OF PERCOLATION TESTING. IF THE SOIL AT GIVEN AREA DOES NOT DRAIN PROPERLY, A PVC DRAIN OR GRAVEL SUMP SHALL BE INSTALLED OR THE PLANTINGS RELOCATED.

8. SHOULD THE LANDSCAPE CONTRACTOR ENCOUNTER UNSATISFACTORY SURFACE OR SUBSURFACE DRAINAGE CONDITIONS, SOIL DEPTH, LATENT SOILS, HARD PANS, STEAM OR OTHER UTILITY LINES OR OTHER CONDITIONS THAT WILL JEOPARDIZE THE HEALTH AND VIGOR OF THE PLANTS, HE MUST ADVISE THE LANDSCAPE ARCHITECT IN WRITING OF THE CONDITIONS PRIOR TO INSTALLING THE PLANTS. OTHERWISE, THE LANDSCAPE CONTRACTOR WARRANTS THAT THE PLANTING AREAS ARE SUITABLE FOR PROPER GROWTH AND DEVELOPMENT OF THE PLANTS TO BE INSTALLED.

9. PLANTING PITS FOR TREE AND SHRUBS SHALL BE PREPARED AS PER DETAILS.

10. DOUBLE HAMMERED SHREDDED HARDWOOD MULCH SHALL BE APPLIED TO ALL SHRUB BEDS BY THE CONTRACTOR. BEDS SHALL BE TREATED WITH PREEMERGENT HERBICIDE BY THE CONTRACTOR BEFORE MULCH IS APPLIED. SHREDDED HARDWOOD MULCH SHALL BE TWO INCHES DEEP. A SAMPLE OF SHREDDED HARDWOOD MULCH SHALL BE PRESENTED TO THE LANDSCAPE ARCHITECT FOR APPROVAL.

11. ALL TREES ARE TO BE STAKED IMMEDIATELY AFTER PLANTING AS DETAILED. CONTRACTOR IS RESPONSIBLE FOR REMOVAL OF STAKING HOSES, ETC. AT THE END OF THE ONE YEAR GUARANTEE PERIOD.

12. THE LANDSCAPE CONTRACTOR SHALL BE RESPONSIBLE FOR CLEANING UP THE SITE AT THE COMPLETION OF THE PROJECT AND SHALL MAINTAIN THE SITE IN A REASONABLY NEAT AND CLEAN STATE THROUGHOUT THE INSTALLATION PROCESS. STREETS AND PAVED AREAS SHALL BE CLEANED REGULARLY TO REMOVE CONSTRUCTION MATERIALS AND OTHER DEBRIS RESULTING FROM WORK OF THE PROJECT.

13. PLANTS SHALL BE GUARANTEED FOR THE DURATION OF ONE (1) FULL YEAR AFTER THE FINAL ACCEPTANCE OF THE PLANTING BY THE OWNER AND SHALL BE ALIVE AND IN SATISFACTORY GROWTH AT THE END OF THE GUARANTEE PERIOD. ANY PLANT NOT IN A HEALTHY AND VIGOROUS STATE AT THE END OF THE GUARANTEE PERIOD SHALL BE REPLACED AT NO COST TO THE OWNER, PLANTS SEVERELY DAMAGED BY VANDALS ARE NOT SUBJECT TO REPLACEMENT BY THE CONTRACTOR DURING THE ONE YEAR GUARANTEE PERIOD.

14. REPLACEMENTS OF DEAD OR UNSATISFACTORY MATERIAL SHALL BE MADE AS SPECIFIED IN THE PLANT LIST. THE OWNER OR LANDSCAPE ARCHITECT SHALL INSPECT REPLACED PLANTS WHEN ALL REPLACEMENTS HAVE BEEN MADE. REPLACEMENTS ARE TO BE ALIVE AND IN A HEALTHY CONDITION WHEN THE REPLACEMENTS ARE COMPLETE, AND SHALL BE SUBJECT TO A ONE (1) YEAR GUARANTEE FROM THE DATE OF SATISFACTORY REPLACEMENT.

15. SHOULD THE CONTRACTOR NOT MAKE REPLACEMENTS IN A SATISFACTORY AND TIMELY FASHION IN ACCORD WITH THE PLANTING NOTES, THE OWNER, AFTER PROPER NOTIFICATION TO THE CONTRACTOR MAY UTILIZE THE FUNDS OF THE RETAINAGE TO HAVE THE REPLACEMENTS MADE IN ACCORD WITH THE SPECIFICATIONS BY ANOTHER CONTRACTOR.

16. NO EXCAVATION OR PLANTING PIT SHALL BE LEFT OPEN OR UNATTENDED OVERNIGHT.

17. PLANT MATERIAL QUANTITIES PROVIDED IN THE PLANT LIST ARE FOR REFERENCE ONLY AND THE CONTRACTOR IS RESPONSIBLE FOR THE ACTUAL PLANT MATERIAL COUNTS. DISCREPANCIES BETWEEN QUANTITIES SHOWN ON THE PLANTING PLAN AND THOSE IN THE PLANT LIST SHALL BE BROUGHT TO THE ATTENTION OF THE LANDSCAPE ARCHITECT FOR CLARIFICATION. IF CLARIFICATION OF DISCREPANCIES FROM THE LANDSCAPE ARCHITECT IS NOT POSSIBLE, THEN QUANTITIES SHOWN ON THE PLANTING PLAN SHALL TAKE PRECEDENCE.

GRAPHIC SCALE 1" = 10'-0"
0' 5' 10' 20' 30'

The Boudreaux Group
The Boudreaux Group, Inc.
1330 Lady St., Suite 500 (29201)
P.O. Box 5695
Columbia, SC 29250
803 799 0247 p
803 771 6844 f
info@boudreauxgroup.com
Interdisciplinary Design Architecture Interiors Planning

A/E Seal: SOUTH CAROLINA CERTIFICATE OF AUTHORIZATION — GRIMBALL COTTERILL & ASSOCIATES No.049

A/E Seal: STATE OF SOUTH CAROLINA REGISTERED LANDSCAPE ARCHITECT — MARK COTTERILL

Project Title: **UNIVERSITY OF SOUTH CAROLINA SCHOOL OF JOURNALISM BROADCAST STUDIO**

BID DOCUMENTS

COLUMBIA, SOUTH CAROLINA

Project No. U-646-12-3
Drawn By **SKC**
Checked By **TMC**
Date 10.31.14

This drawing and the design thereon are the property of The Boudreaux Group, Inc. The reproduction, copying, or use of this drawing without the written consent of The Boudreaux Group, Inc. is prohibited and any infringement will be subject to legal action. Copyright © 2001 The Boudreaux Group

Revisions No.	Name	Date

Drawing Title: **PLANTING PLAN**

Drawing No. **L-1**

Nov 03, 2014 - 9:13am \\Palmetto\grimcott\Active Projects on Maple\T-Z Projects\USC Broadcast\CDBase.dwg.

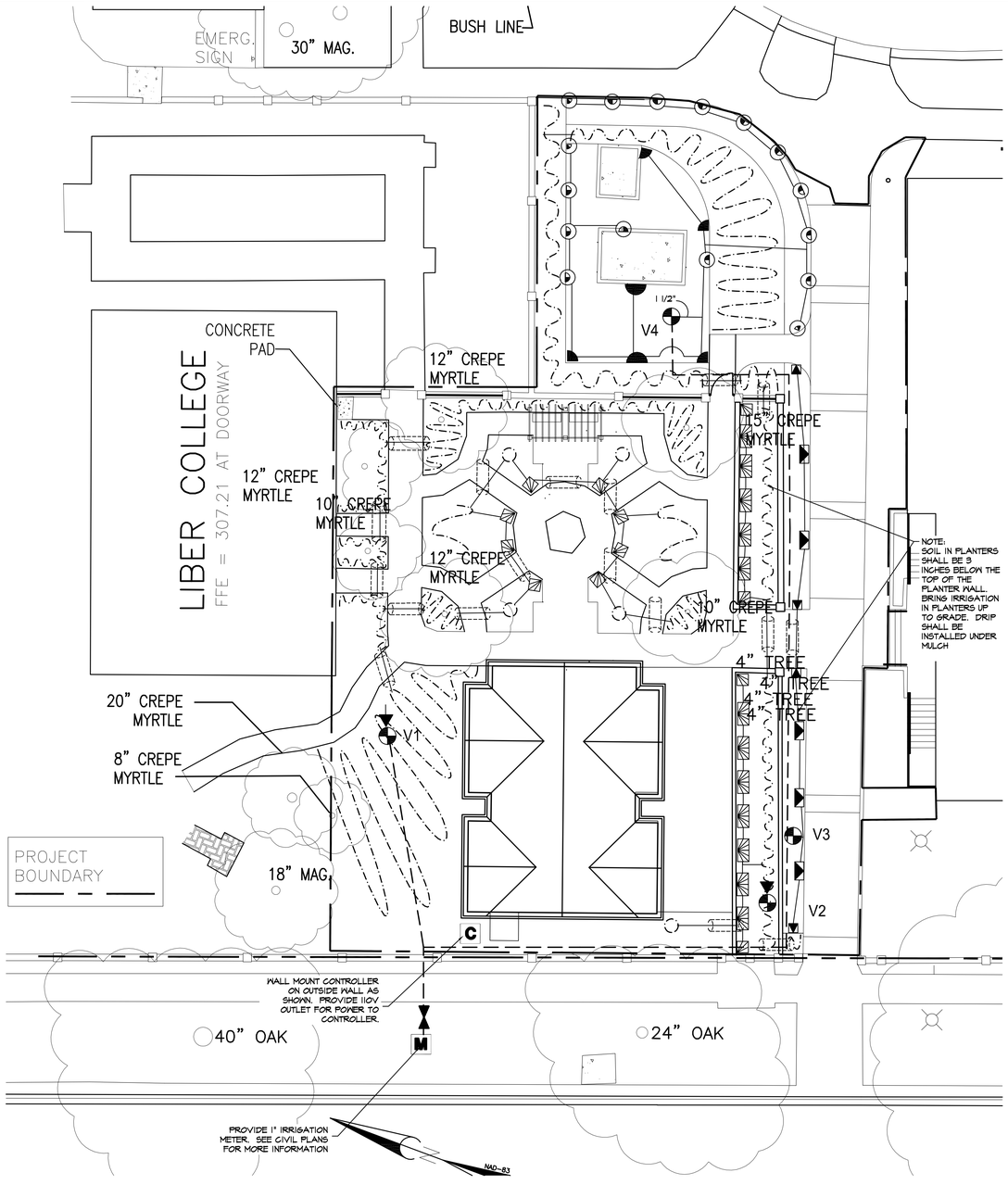

IRRIGATION LEGEND

- M — 1" IRRIGATION METER
- C — RAINBIRD ESP-SMT CONTROLLER WITH ORBIT RAIN/FREEZE SENSOR
- 1" DOUBLE CHECK VALVE BACKFLOW PREVENTER
- RAINBIRD PGA-100 SERIES ELECTRIC VALVE
- XCZ-100-B-COM
- RAIN BIRD 1800 SERIES SPRAY HEAD
  - 8Q — 15H
  - 8H — SQ-Q
  - 15Q — SQ-H
- 1 1/2" MAINLINE
- 1" CLASS 160 OR 200 PVC PIPING
- RAINBIRD DRIP TUBING WITH RAIN-BUG EMITTERS
- 4" SCH. 40 PVC SLEEVING

VALVE SCHEDULE

VALVE	SIZE	TYPE	GPM
V1	1"	DRIP	10±
V2	1"	DRIP	10±
V3	1"	SPRAY	9.1
V4	1"	SPRAY	18.07

IRRIGATION NOTES

1. ALL IRRIGATION TO BE AS SPECIFIED OR APPROVED EQUAL.
2. SYSTEM DESIGNED TO RUN AT 20 GPM WITH 65 PSI.
3. CONTRACTOR TO COORDINATE WITH OWNER CONCERNING IRRIGATION METER PRIOR TO COMMENCEMENT OF WORK SO AS NOT TO DELAY COMPLETION OF IRRIGATION.
4. CONTRACTOR SHALL PERFORM PRESSURE AND FLOW TESTS AT PROPOSED POINT OF CONNECTION PRIOR TO INSTALLATION TO VERIFY THAT ADEQUATE DESIGN CRITERIA IS PRESENT.
5. ADJUSTMENT OF SPRINKLER HEADS AND DRIP LINES WILL BE NECESSARY IN THE FIELD.
6. DRIP TUBE SYMBOLS AND IRRIGATION PIPING LAYOUT PROVIDED FOR GENERAL LOCATIONS IN THE FIELD ONLY, SYMBOLS DO NOT NECESSARILY PORTRAY AN ACCURATE QUANTITY. THE DESIGN INTENT IS TO PROVIDE 100% HEAD TO HEAD COVERAGE. IF THIS CANNOT BE ACHIEVED, NOTIFY LANDSCAPE ARCHITECT IMMEDIATELY.
7. UTILIZE EMITTER DISTRIBUTION TUBING AS DETAILED.
8. INSTALL AUTO FLUSH VALVES ON DRIP TUBE AT ENDS AS NEEDED TO DRAIN DRIP TUBE AFTER EACH USE.
9. ALL DRIP TUBE TO BE INSTALLED UNDER MULCH.
10. WHERE IRRIGATION PIPING CROSSES SIDEWALKS, THE CONTRACTOR SHALL SHALL BE RESPONSIBLE FOR PLACING A SLEEVE 2 SIZES LARGER THAN THE CROSSING PIPE.
11. IRRIGATION CONTRACTOR TO ADJUST SPRAY PATTERNS TO SURROUNDING PLANT BEDS. OVERSPRAY ONTO BUILDINGS AND SIDE WALKS SHALL BE AVOIDED AS MUCH AS POSSIBLE.

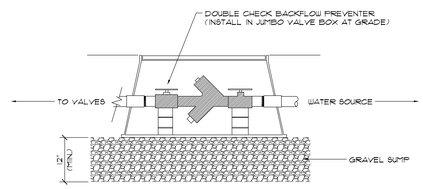

A / I-1 BACKFLOW PREVENTER
SECTION — NOT TO SCALE

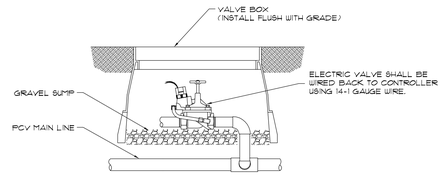

B / I-1 ELECTRIC VALVE
SECTION — NOT TO SCALE

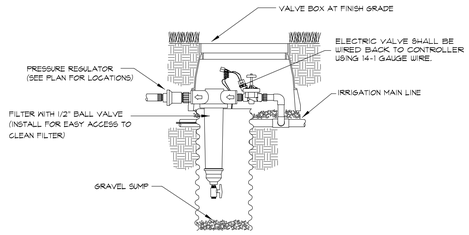

C / I-1.3 ELECTRIC VALVE-DRIP ZONE
SECTION — NOT TO SCALE

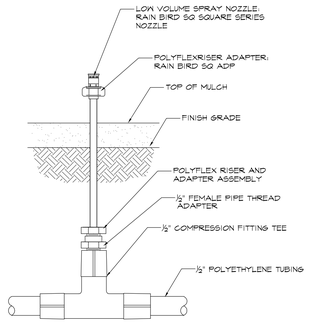

D / I-1 SQ NOZZLE ON DRIP TUBING FOR ANNUALS
SECTION — NOT TO SCALE

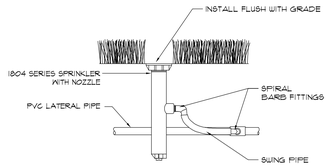

E / I-1 POP-UP SPRAY SPRINKLER
SECTION — NOT TO SCALE

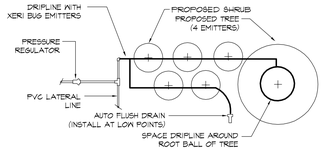

F / I-1 DRIPLINE IN SHRUBS
PLAN — NOT TO SCALE

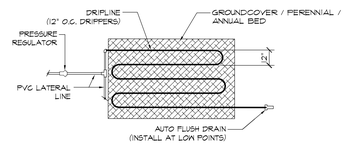

G / I-1 DRIPLINE IN GROUNDCOVER
PLAN — NOT TO SCALE

IRRIGATION NOTES

1. ALL PLASTIC PIPE FITTINGS TO BE MINIMUM SCHEDULE 40 PVC.
2. ALL MAIN LINES TO BE SCHEDULE 40 PVC OR SCHEDULE 200 PVC.
3. ALL LATERAL LINES TO BE SCHEDULE 200 PVC OR SCHEDULE 160 PVC.
4. COORDINATE WITH GENERAL CONTRACTOR FOR INSTALLATION OF SCHEDULE 40 PVC PIPE UNDER PAVED SURFACES AS NOTED ON THE DRAWINGS TO BE UTILIZED FOR IRRIGATION SLEEVING. THE LOCATION OF SLEEVING IS MARKED ON THE IRRIGATION PLAN. DEVIATIONS MAY OCCUR DURING CONSTRUCTION.
5. TRENCHES FOR PVC PIPE MAINLINES SHALL BE EXCAVATED TO SUFFICIENT DEPTH OF 18" MINIMUM AND AN SUFFICIENT WIDTH TO PERMIT PROPER HANDLING AND INSTALLATION OF PIPE AND FITTINGS. TRENCHES FOR PVC PIPE LATERAL SPRINKLER LINES SHALL BE EXCAVATED TO SUFFICIENT DEPTH OF 12" MINIMUM AND AN SUFFICIENT WIDTH TO PERMIT PROPER HANDLING AND INSTALLATION OF PIPE AND FITTINGS.
6. ALL CONTROL VALVES SHALL BE INSTALLED IN A VALVE BOX IN ACCORDANCE WITH MANUFACTURER'S SPECIFICATIONS.
7. ALL WIRING TO BE USED FOR CONNECTING THE AUTOMATIC REMOTE CONTROL VALVE TO THE AUTOMATIC CONTROLLERS SHALL BE TYPE "UF" 14-1, STRANDED OR SOLID COPPER, SINGLE CONDUCTOR WIRE WITH PVC INSULATION AND BEAR UL APPROVAL FOR DIRECT UNDERGROUND BURIAL FEEDER CABLE. WIRE CONNECTIONS TO REMOTE CONTROL ELECTRIC VALVES AND SPLICES OF WIRE IN THE FIELD SHALL BE PEN-TITE WIRE CONNECTORS OR APPROVED EQUAL AND SCALING CEMENT.
8. THE IRRIGATION CONTRACTOR SHALL CONNECT ALL VALVE WIRING TO A SPECIFIED CONTROLLER LOCATED AS NOTED ON THIS PLAN.
9. ALL CONTROL VALVE CABLES SHALL BE INSTALLED BY DIRECT BURIAL AT A MINIMUM DEPTH OF 12". WHERE PRACTICAL, THE WIRE SHALL BE INSTALLED IN THE SAME TRENCH AS THE MAINLINE PIPE.
10. AFTER COMPLETION OF THE PIPING INSTALLATION, THE CONTRACTOR SHALL FURNISH AN "AS-BUILT" DRAWING SHOWING ALL SPRINKLER HEADS, VALVES, DRAINS AND PIPE LINES TO SCALE WITH DIMENSIONS WHERE REQUIRED. INSTRUCTION SHEETS AND PARTS LISTS COVERING ALL OPERATING EQUIPMENT WILL BE BOUND INTO A FOLDER AND FURNISHED TO THE OWNER IN DUPLICATE.
11. FOR A PERIOD OF ONE YEAR FROM THE DATE OF FINAL ACCEPTANCE OF THE WORK PERFORMED UNDER THIS CONTRACT, THE CONTRACTOR SHALL PROMPTLY FURNISH, WITHOUT COST TO THE OWNER, ANY AND ALL PARTS AND LABOR WHICH PROVE DEFECTIVE IN MATERIAL OR WORKMANSHIP.
12. DURING THE LAST MONTH OF THE GUARANTEE PERIOD, THE LANDSCAPE ARCHITECT AND CONTRACTOR SHALL INSPECT THE INSTALLATION TO DETERMINE THE CONDITION OF THE COMPLETE SYSTEM. A LIST OF DEFECTIVE MATERIALS OR INSTALLATIONS TO BE REPLACED SHALL BE MADE BY THE CONTRACTOR WITHIN THIRTY DAYS OF RECEIVING WRITTEN NOTIFICATION. REPLACED MATERIALS AND INSTALLATION SHALL BE IN ACCORD WITH THESE SPECIFICATIONS, DRAWINGS AND OR SCHEDULES.

GRAPHIC SCALE 1" = 10'-0"
0' 5' 10' 20' 30'

The Boudreaux Group
Interdisciplinary Design Architecture Interiors Planning
The Boudreaux Group, Inc.
1320 Lady St., Suite 300 (29201)
P.O. Box 11849
Columbia, SC 29211
803.799.0247 p
803.799.0647 f
info@boudreauxgroup.com

A/E Seal: GRIMBALL COTTERILL & ASSOCIATES No.049 — STATE OF SOUTH CAROLINA — CERTIFICATE OF AUTHORITY

A/E Seal: REGISTERED LANDSCAPE ARCHITECT — STATE OF SOUTH CAROLINA — No. 467 — MARK COTTERILL

Project Title
UNIVERSITY OF SOUTH CAROLINA
SCHOOL OF JOURNALISM
BROADCAST STUDIO
BID DOCUMENTS
COLUMBIA, SOUTH CAROLINA

Project No. 13-1646-12-3
Drawn By SKC
Checked By MAG
Date 10.31.14

No reproduction, copy or transmittal of this drawing is allowed without written permission, unless covered by the Boudreaux Group contract. Any unauthorized use, without specific written permission, will be subject to legal action by the Boudreaux Group.

Revisions
No. Name Date

Drawing Title
IRRIGATION PLAN

Drawing No.
I-1

Nov 03, 2014 - 9:15am \\Palmetto\grimcott\Active Projects on Maple\7-Z Projects\USC Broadcast\CDBase.dwg

ALL CONSTRUCTION IS EXISTING TO REMAIN EXCEPT THE NEW BROADCAST STUDIO AND ADJACENT NEW HARDSCAPE EXCEPT AS NOTED. ALL ADJACENT TREES, PAVERS, AND SHRUBBERY TO REMAIN AND BE PROTECTED. REMOVE ROSEBUSHES, STORE AT LOCATION AS DIRECTED BY OWNER, AND REPLANT AT COMPLETION OF PROJECT. SEE LANDSCAPE DRAWINGS FOR FURTHER INFORMATION. ALL CONSTRUCTION SHALL BE ACCOMPLISHED WITH SMALL EQUIPMENT IN LIMITED AREA.

ALL BRICK WALLS WITHIN BOUNDARY OF PROJECT SITE TO BE REPOINTED AS REQUIRED. DAMAGED BRICKS TO BE REMOVED AND REPLACED WITH SOUND SALVAGED BRICK FROM DEMOLITION. ANY REMAINING BRICK TO BE TURNED OVER TO THE OWNER.

GENERAL SITE CONTROL NOTE:
CONTRACTOR TO COORDINATE WITH OWNER AND SCE&G TO PROVIDE TEMPORARY SAFETY LIGHTING AT NIGHT DURING CONSTRUCTION WHILE EXISTING LIGHTS ARE DEMOLISHED AND PRIOR TO INSTALLATION OF NEW LIGHTING. CONTRACTOR TO COORDINATE WITH OWNER AND SCE&G FOR TEMPORARY POWER.

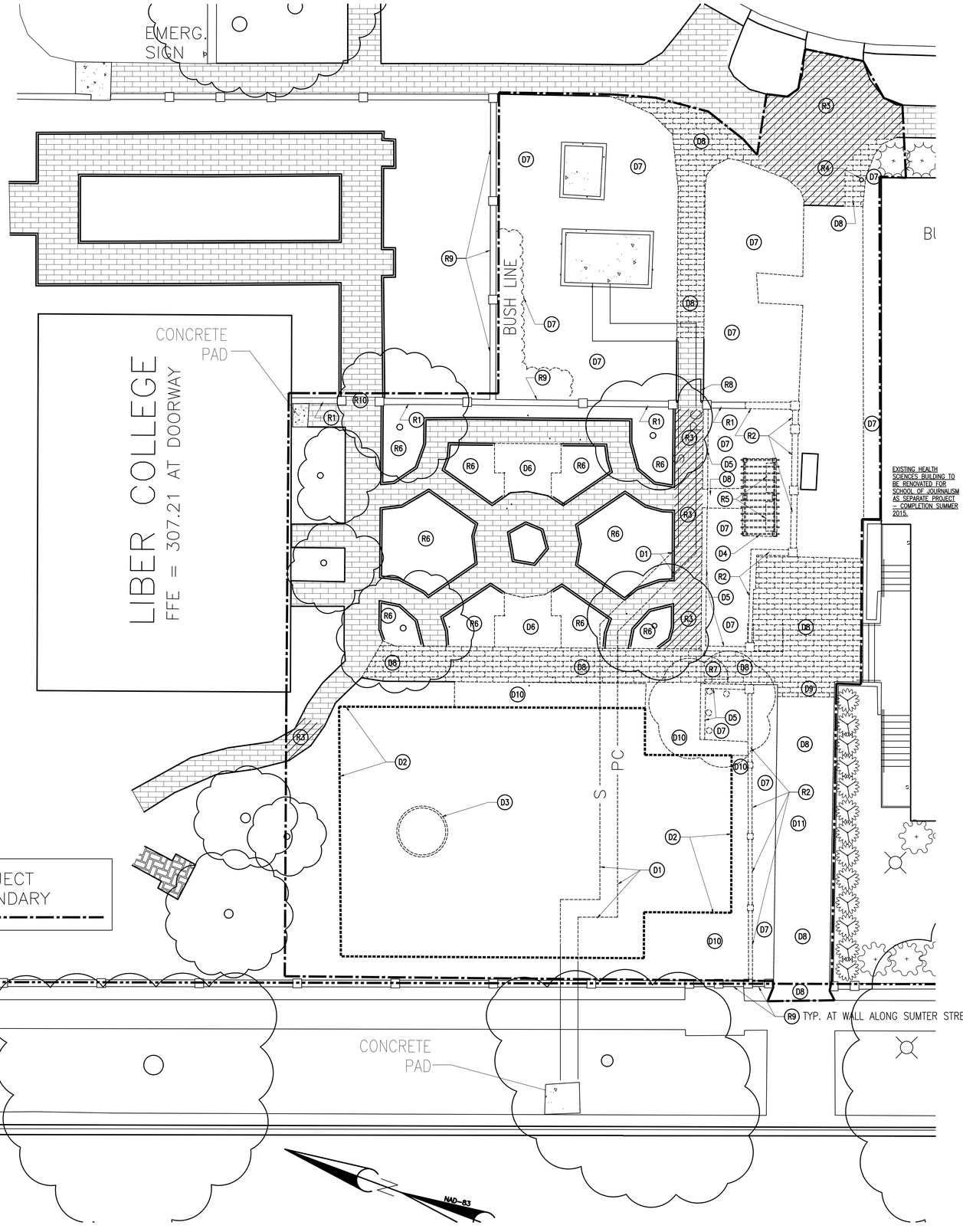

DEMOLITION KEY NOTES:

(ALSO REFER TO C1.1 FOR SITE DEMOLITION NOTES)
CONTRACTOR TO RETAIN FOR REUSE ALL BRICK ON APPROX 6' TALL SITE WALLS CALLED TO BE DEMOLISHED. ANY BRICK LEFTOVER AT COMPLETION OF THE PROJECT TO BE RETURNED TO THE OWNER.

D1 REMOVE EXISTING STEAM LINES AS INDICATED AND PREPARE TO RELOCATE PORTION OF STEAM LINES, SEE MECHANICAL PLANS FOR DETAILS.

D2 EXTENTS OF EXISTING GREENHOUSE TO BE DEMOLISHED IN ITS ENTIRETY. SEE ENGINEERING DRAWINGS FOR UTILITY DEMOLITION. SEE HAZARDOUS ABATEMENT DOCUMENTS FOR ASBESTOS AND LEAD PAINT ABATEMENT INCLUDED IN THIS CONTRACT. REMOVE FOUNDATIONS AND PREPARE SOILS FOR NEW WORK AS DIRECTED BY THE CONTRACT DOCUMENTS.

D3 REMOVE EXISTING INTERIOR BRICK AND POND LINER KOI POND ON INTERIOR, FILL AS INDICATED BY STRUCTURAL, AND PREPARE SOILS FOR NEW WORK AS DIRECTED BY THE CONTRACT DOCUMENTS.

D4 DEMOLISH TRELLIS AND FOUNDATIONS AND PREPARE FOR NEW WORK.

D5 DEMOLISH PRECAST CAPS AND EXISTING KNEE WALL AND PREPARE FOR NEW WORK AS NOTED ON FENCE ELEVATIONS.

D6 PLANTING BED AND EDGE PAVERS TO BE REMOVED. PREPARE FOR NEW PAVER INSTALLATION.

D7 DEMOLISH LANDSCAPING IN THIS AREA AND PREPARE FOR NEW WORK.

D8 DEMOLISH SIDEWALK IN THIS AREA AND PREPARE FOR NEW WORK.

D9 APPROXIMATE LOCATION OF UNDERGROUND TRENCH TO BRING POWER AND DATA FROM ADJACENT SCHOOL OF JOURNALISM

D10 REMOVE GROUNDCOVER AND PAVING THIS AREA TO PREPARE FOR NEW BRICK PAVER PLAZA.

RETAIN/PROTECT AND/OR SALVAGE FOR NEW CONSTRUCTION KEY NOTES:

(ALSO REFER TO C1.1 FOR SITE DEMOLITION NOTES)

R1 MODIFY EXISTING BRICK WALL BETWEEN PIERS TO REMOVE BRICK ABOVE APPROX. 2' HIGH AND PREPARE FOR NEW METAL FENCE. SEE DETAILS ON FENCE ELEVATION DRAWINGS. BRICKS TO BE SALVAGED AND TURNED OVER TO OWNER. ALL CONSTRUCTION SHALL BE ACCOMPLISHED WITH SMALL EQUIPMENT IN LIMITED AREA.

R2 DEMOLISH BRICK INFILL, PILASTERS, CAPS, AND FOUNDATIONS IN THEIR ENTIRETY. SEE FENCE ELEVATIONS FOR DETAILS. BRICKS TO BE SALVAGED AND EITHER REUSED FOR CONSTRUCTION OR EXTRA TURNED OVER TO OWNER. ALL CONSTRUCTION SHALL BE ACCOMPLISHED WITH SMALL EQUIPMENT IN LIMITED AREA.

R3 REMOVE PAVERS IN THIS LOCATION AS INDICATED BY HATCH PATTERN AND STORE FOR REINSTALLATION ONCE SITE WALLS HAVE BEEN DEMOLISHED AND NEW WALLS ARE IN PLACE. CONTRACTOR TO REPAIR OR REPLACE ANY DAMAGED PAVERS ASSOCIATED WITH THE WORK.

R4 PROTECT LIGHT POLE TO REMAIN FROM CONSTRUCTION WORK. SEE ELECTRICAL DRAWINGS.

R5 REMOVE BENCHES AND STORE UNTIL PROJECT COMPLETION FOR REINSTALLATION AS NOTED.

R6 REMOVE LANDSCAPING IN THIS BED FOR TEMPORARY STORAGE OFF-SITE AT LOCATION INDICATED BY OWNER AND REPLANT AT COMPLETION OF CONSTRUCTION. PROTECT BRICK PAVERS AS MUCH AS POSSIBLE, AND REPAIR ANY BROKEN OR DAMAGED PAVERS AT COMPLETION OF CONSTRUCTION. EXISTING TREES TO REMAIN, CONTRACTOR TO PROVIDE PROTECTION AS NOTED ON LANDSCAPE DRAWINGS.

R7 DEMOLISH GATE AND ARCHWAY AT THIS LOCATION, AND TURN OVER MATERIALS TO OWNER.

R8 REMOVE AND STORE GATE DURING CONSTRUCTION, REPLACE WHEN CONSTRUCTION IS COMPLETE. CONTRACTOR TO CLEAN AND REPAIR GATE AND TOUCHUP MORTAR AND BRICK ON PIERS AS REQUIRED.

R9 EXISTING BRICK WALL TO REMAIN. PROTECT FROM CONSTRUCTION.

R10 BRICK PIERS AND GATE TO REMAIN AT THIS LOCATION. CONTRACTOR TO CLEAN AND REPAIR GATE AND TOUCHUP MORTAR AND BRICK ON PIERS AS REQUIRED.

The Boudreaux Group
Interdisciplinary Design Architecture Interior Planning
The Boudreaux Group, Inc.
1330 Lady St., Suite 500 (29201)
P.O. Box 50563
Columbia, SC 29250
803 799 0247 p
803 771 0844 f
info@theboudreauxgroup.com

STATE OF SOUTH CAROLINA — ROBERT [illegible] — 5046 — REGISTERED ARCHITECT — A/E Seal

STATE OF SOUTH CAROLINA — The Boudreaux Group, Inc. — Columbia, South Carolina — C-7010 — REGISTERED ARCHITECTS — A/E Seal

Project Title
UNIVERSITY OF SOUTH CAROLINA
SCHOOL OF JOURNALISM
BROADCAST STUDIO
BID DOCUMENTS
COLUMBIA, SOUTH CAROLINA

Project No. 1-2-3
Drawn By RRH
Checked By RRH
Date 10.31.14

No drawing and its design, layout and concept shall be used in whole or in part for any construction, reuse, or other purpose of The Boudreaux Group without the written consent of The Boudreaux Group. Unauthorized use of this drawing shall be subject to legal action by The Boudreaux Group.

Revisions
No. Name Date

Drawing Title
DEMOLITION SITE PLAN

Drawing No.
DAS1.1

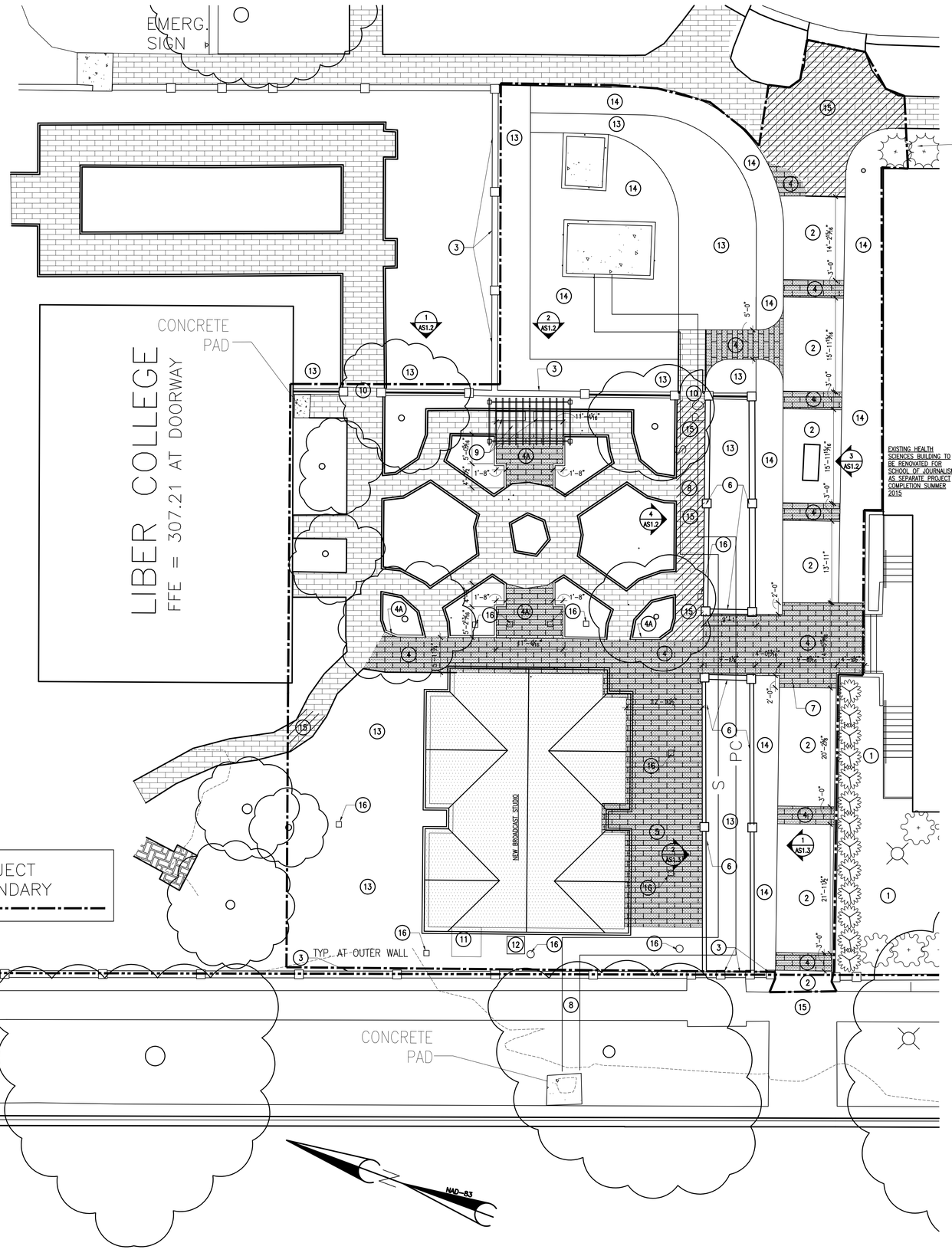

SITE PLAN KEY NOTES:

1. LANDSCAPE IN THIS AREA BEING INSTALLED UNDER SEPARATE CONTRACT TO BE PROTECTED FROM CONSTRUCTION ACTIVITIES.
2. NEW CONCRETE SIDEWALK/DRIVE – SEE CIVIL DRAWINGS
3. HISTORIC GARDEN WALL TO BE PROTECTED DURING CONSTRUCTION; ALL CONSTRUCTION SHALL BE ACCOMPLISHED WITH SMALL EQUIPMENT IN LIMITED AREA
4. NEW BRICK PAVERS TO BE INSTALLED SET IN MORTAR BED OVER 4" CONCRETE PAVING AS INDICATED BY HATCH PATTERN – TOOTH INTO EXISTING PAVERS WHERE APPLICABLE. INSTALL FLUSH EDGE DETAIL (EDGE PAVER TURNED 90 DEGREES TO BOND PATTERN) TO MATCH EXISTING ADJACENT SIDEWALKS.
4A. NEW BRICK PAVERS TO BE INSTALLED SET IN MORTAR BED OVER 4" CONCRETE PAVING AS INDICATED BY HATCH PATTERN – TOOTH INTO EXISTING PAVERS WHERE APPLICABLE. INCLUDE RAISED SOLDIER COURSE AROUND EDGES AT BEDS TO MATCH EXISTING DETAIL INSIDE ROSE GARDEN.
5. NEW BRICK PAVER TERRACE TO EAST OF STUDIO WITH PERIMETER LANDSCAPE BEDS – MATCH EXISTING SIDEWALK FLUSH EDGE DETAIL AT EDGES OF TERRACE
6. NEW APPROX. 2' TALL BRICK SEAT WALL, SEE FENCE ELEVATIONS FOR DETAILS.
7. APPROXIMATE LOCATION OF UNDERGROUND TRENCH TO BRING POWER AND DATA FROM ADJACENT SCHOOL OF JOURNALISM. SEE ELECTRICAL DRAWINGS FOR DETAILS.
8. EXISTING UNDERGROUND STEAM AND CONDENSATE LINES TO REMAIN. SEE MECHANICAL DRAWINGS FOR AREA OF LINES TO BE RELOCATED.
9. RELOCATED BENCHES AND NEW TRELLIS (TRELLIS BASIS OF DESIGN: 8' X 14' CEDAR 2 BEAM PERGOLA WITH SOLID STAIN COLOR SELECTED BY ARCHITECT – BY GAZEBO CREATIONS, OR APPROVED EQUAL.)
10. BRICK PIERS AND GATE TO REMAIN AT THIS LOCATION. CONTRACTOR TO CLEAN AND REPAIR GATE WHERE OCCURS AND TOUCHUP MORTAR AND BRICK ON PIERS AS REQUIRED.
11. NEW CONCRETE PAD AT DOOR
12. HVAC CONDENSER UNIT, SEE MECHANICAL FOR DETAILS
13. NEW LANDSCAPING, SEE LANDSCAPE DRAWINGS FOR DETAILS
14. NEW SODDED AREA, SEE LANDSCAPE DRAWINGS FOR DETAILS
15. REINSTALL EXISTING PAVERS NOTED TO BE REMOVED FOR NEW WORK AS INDICATED BY HATCH PATTERN AT COMPLETION OF NEW SITE WALL WORK. CONTRACTOR TO PROTECT EXISTING PAVERS FROM DAMAGE. SEE CIVIL DRAWINGS FOR FENCING REQUIREMENTS.
16. NEW AREA DRAIN, SEE CIVIL DRAWINGS FOR DETAILS. WHEN LOCATED IN BRICK PAVER AREA, COORDINATE WITH ARCHITECT FOR PATTERN AND PLACEMENT OF BRICK PRIOR TO INSTALLATION

ALL CONSTRUCTION IS EXISTING TO REMAIN EXCEPT THE NEW BROADCAST STUDIO AND ADJACENT NEW HARDSCAPE EXCEPT AS NOTED. ALL ADJACENT TREES AND SHRUBBERY TO REMAIN AND BE PROTECTED.

The Boudreaux Group

Interdisciplinary Design Architecture Interiors Planning

The Boudreaux Group, Inc.
1330 Lady St., Suite 500 (29201)
P.O. Box 12905
Columbia, SC 29250
803 799 0247 p
803 771 0844 f
info@theboudreauxgroup.com

A/E Seal

STATE OF SOUTH CAROLINA
ROBERT R. HUTTON
5046
REGISTERED ARCHITECT
M-01-15

A/E Seal

STATE OF SOUTH CAROLINA
The Boudreaux Group, Inc.
Columbia, South Carolina
B-770110
REGISTERED ARCHITECTS

Project Title
UNIVERSITY OF SOUTH CAROLINA
SCHOOL OF JOURNALISM
BROADCAST STUDIO

BID DOCUMENTS
COLUMBIA, SOUTH CAROLINA

Project No.
1144.02-3
Drawn By
RRH
Checked By
RRH
Date
10.31.14

No drawing set or its design based upon it may be used in any way, at any time, by reproduction, copying, or any other means whatsoever, except with the written permission of The Boudreaux Group. All rights reserved unpublished and the statutory notice of copyright to that effect is hereby reserved by The Boudreaux Group.

Revisions

No.	Name	Date

Drawing Title
ARCHITECTURAL
SITE PLAN

Drawing No.
AS1.1

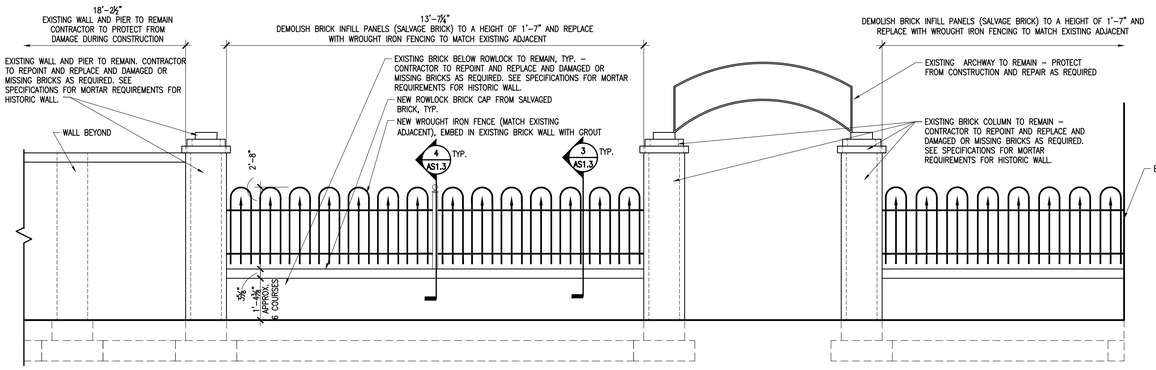

ALL BRICK WALLS WITHIN BOUNDARY OF PROJECT SITE TO BE REPOINTED AS REQUIRED. DAMAGED BRICKS TO BE REMOVED AND REPLACED WITH SOUND SALVAGED BRICK FROM DEMOLITION. ANY REMAINING BRICK TO BE TURNED OVER TO THE OWNER.

1 FENCE ELEVATION
AS1.2 SCALE: 1/2" = 1'-0"

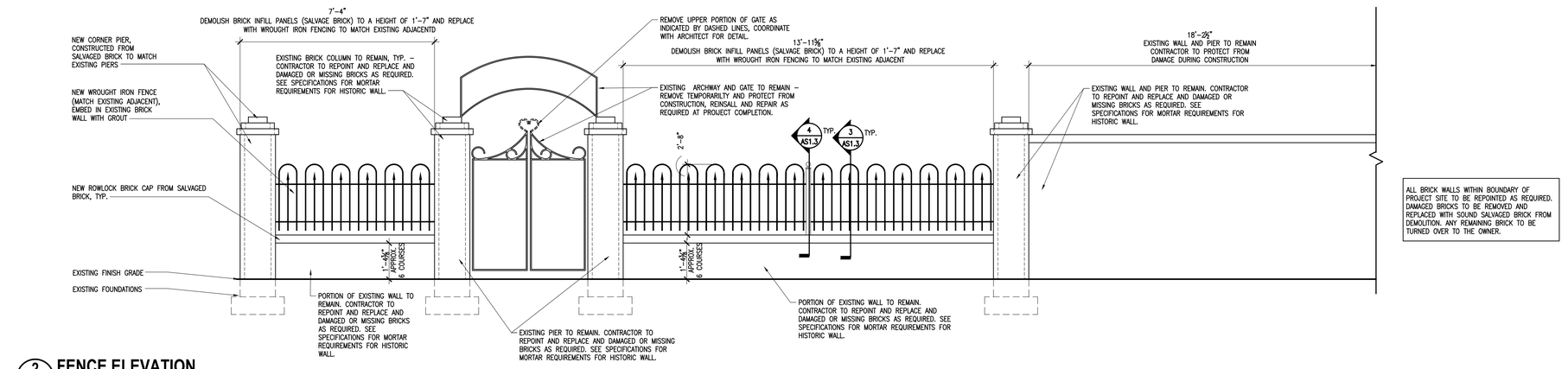

ALL BRICK WALLS WITHIN BOUNDARY OF PROJECT SITE TO BE REPOINTED AS REQUIRED. DAMAGED BRICKS TO BE REMOVED AND REPLACED WITH SOUND SALVAGED BRICK FROM DEMOLITION. ANY REMAINING BRICK TO BE TURNED OVER TO THE OWNER.

2 FENCE ELEVATION
AS1.2 SCALE: 1/2" = 1'-0"

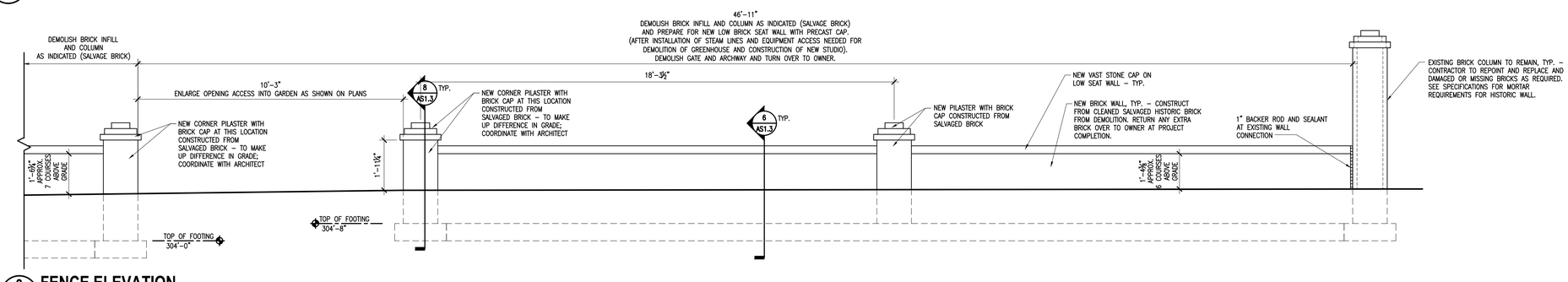

3 FENCE ELEVATION
AS1.2 SCALE: 1/2" = 1'-0"

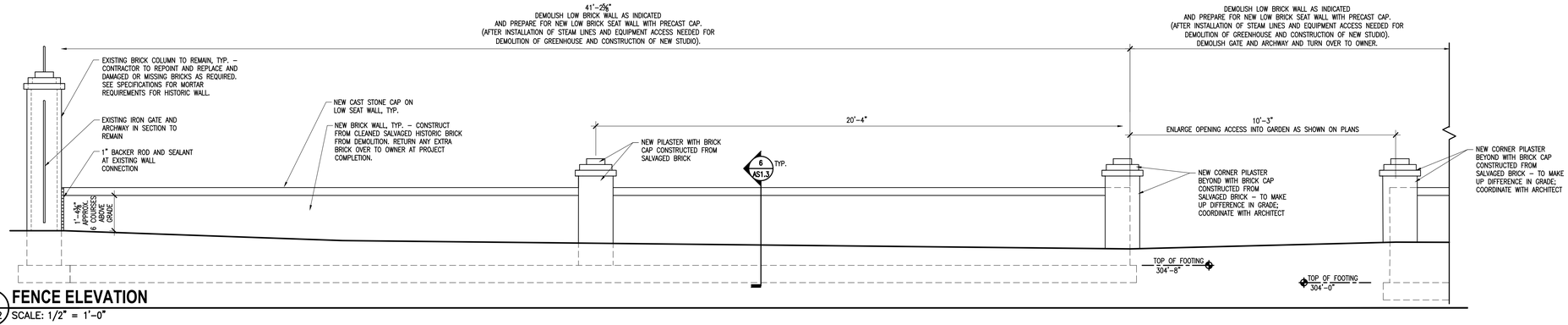

ALL BRICK WALLS WITHIN BOUNDARY OF PROJECT SITE TO BE REPOINTED AS REQUIRED. DAMAGED BRICKS TO BE REMOVED AND REPLACED WITH SOUND SALVAGED BRICK FROM DEMOLITION. ANY REMAINING BRICK TO BE TURNED OVER TO THE OWNER.

NOTE: ALL DIMENSIONS ARE APPROXIMATE. CONTRACTOR TO FIELD VERIFY EXISTING CONDITIONS PRIOR TO COMMENCEMENT OF WORK.

4 FENCE ELEVATION
AS1.2 SCALE: 1/2" = 1'-0"

The Boudreaux Group
The Boudreaux Group, Inc.
1320 Lady St., Suite 200 (29201)
P.O. Box 5905
Columbia, SC 29250
803 799 0227 P
803 771 6844 F
info@theboudreauxgroup.com
Interdisciplinary Design Architecture Interiors Planning

A/E Seal
STATE OF SOUTH CAROLINA
ROBERT R. HOLLAND
REGISTERED ARCHITECT
5046
10-01-14

A/E Seal
STATE OF SOUTH CAROLINA
The Boudreaux Group, Inc.
Columbia, South Carolina
B-77010
REGISTERED ARCHITECTS

Project Title
UNIVERSITY OF SOUTH CAROLINA
SCHOOL OF JOURNALISM
BROADCAST STUDIO
BID DOCUMENTS
COLUMBIA, SOUTH CAROLINA

Project No. 1302.12-3
Drawn By KGQ
Checked By RRH
Date 10.31.14

This drawing and the design thereon constitute the original and unpublished work of The Boudreaux Group and the same may not be duplicated, used or disclosed without written consent of The Boudreaux Group. ©2014 The Boudreaux Group

Revisions
No. Name Date

Drawing Title
FENCE ELEVATIONS

Drawing No.
AS1.2

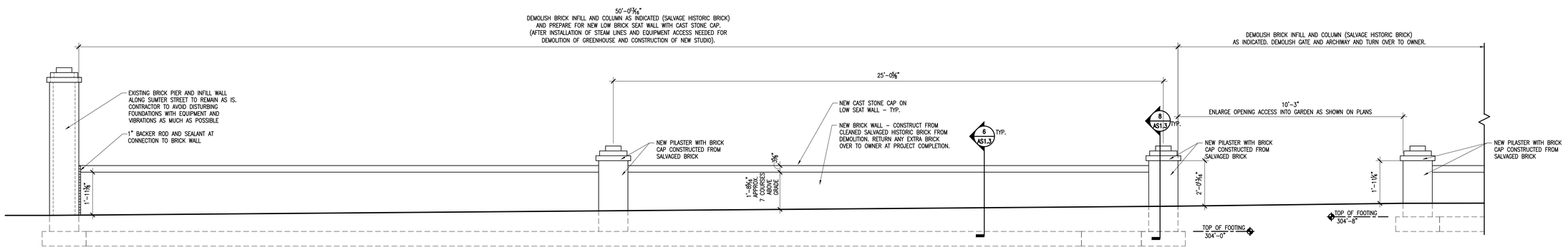

1 FENCE ELEVATION
AS1.3 SCALE: 1/2" = 1'-0"

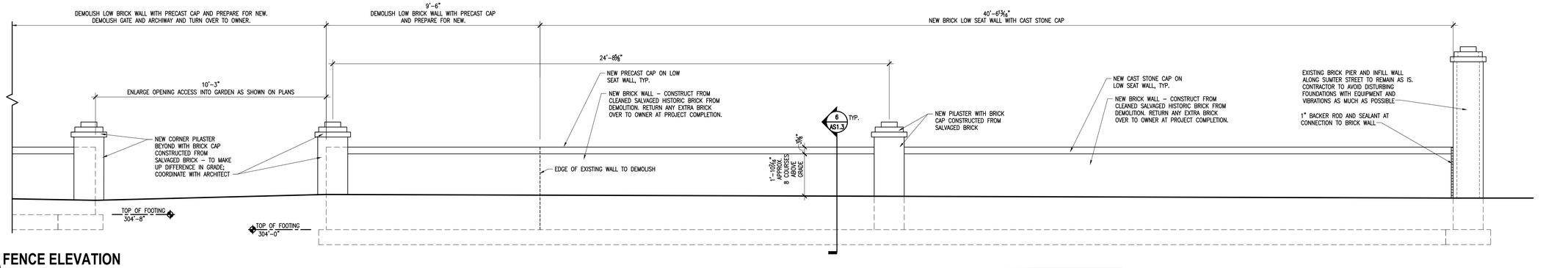

2 FENCE ELEVATION
AS1.3 SCALE: 1/2" = 1'-0"

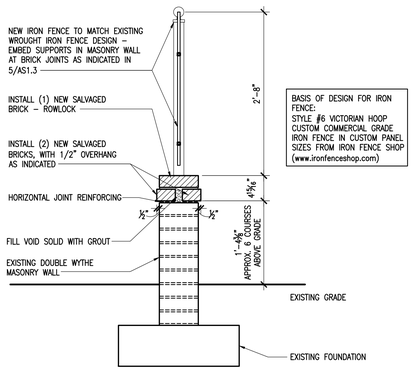

@ ALTERED FENCE
3 FENCE SECTION - AT PANEL
AS1.3 SCALE: 1" = 1'-0"

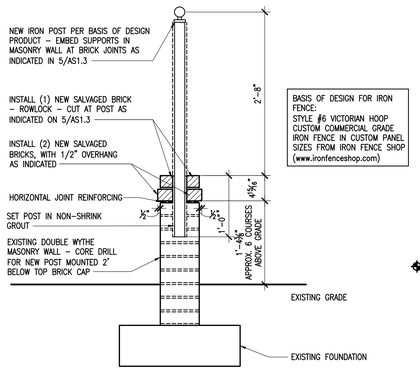

@ ALTERED FENCE
4 FENCE SECTION - AT POST
AS1.3 SCALE: 1" = 1'-0"

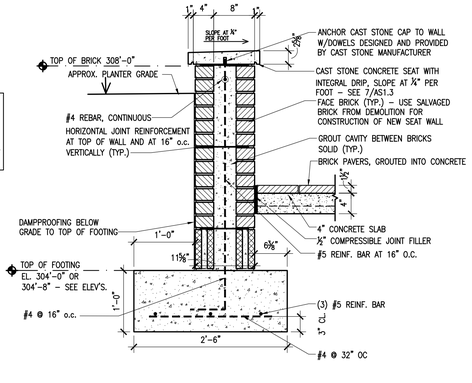

@ NEW LOW WALL
6 WALL SECTION
AS1.3 SCALE: 1" = 1'-0"

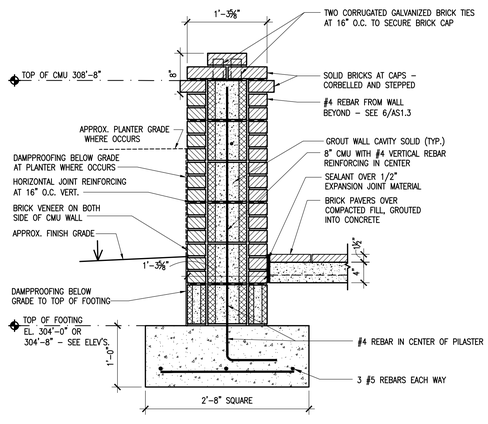

@ NEW LOW PILASTER
8 WALL SECTION
AS1.3 SCALE: 1" = 1'-0"

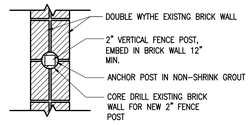

PLAN DETAIL AT POST

@ ALTERED FENCE
5 PLAN VIEW - AT POST
AS1.3 SCALE: 1" = 1'-0"

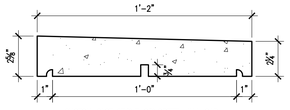

CUSTOM CAST STONE CONCRETE WALL CAP WITH INTEGRAL DRIP AT TOP OF SEAT WALL

7 ENLARGED CAST STONE SHAPE
AS1.3 SCALE: 3" = 1'-0"

ALL BRICK WALLS WITHIN BOUNDARY OF PROJECT SITE TO BE REPOINTED AS REQUIRED. DAMAGED BRICKS TO BE REMOVED AND REPLACED WITH SOUND SALVAGED BRICK FROM DEMOLITION. ANY REMAINING BRICK TO BE TURNED OVER TO THE OWNER.

NOTE: ALL DIMENSIONS ARE APPROXIMATE. CONTRACTOR TO FIELD VERIFY EXISTING CONDITIONS PRIOR TO COMMENCEMENT OF WORK.

The Boudreaux Group
The Boudreaux Group, Inc.
1330 Lady St., Suite 300 (29201)
P.O. Box 5905
Columbia, SC 29250
803 799 0227 P
803 771 6844 F
info@theboudreauxgroup.com
Interdisciplinary Design Architecture Interiors Planning

A/E Seal
STATE OF SOUTH CAROLINA
ROBERT K. GOLDSMITH
REGISTERED ARCHITECT
5046
10-01-14

A/E Seal
STATE OF SOUTH CAROLINA
The Boudreaux Group, Inc.
Columbia, South Carolina
B-77010
REGISTERED ARCHITECTS

Project Title
UNIVERSITY OF SOUTH CAROLINA
SCHOOL OF JOURNALISM
BROADCAST STUDIO
BID DOCUMENTS
COLUMBIA, SOUTH CAROLINA

Project No. 1305.12-3
Drawn By KGQ
Checked By RRH
Date 10.31.14

The drawing and the design thereon are the property of the Boudreaux Group. Any the reproduction, copying, or utilization of this drawing in whole or in part without written permission of the Boudreaux Group is prohibited by law. © 2014 The Boudreaux Group

Revisions
No. Name Date

Drawing Title
FENCE ELEVATIONS AND DETAILS

Drawing No.
AS1.3

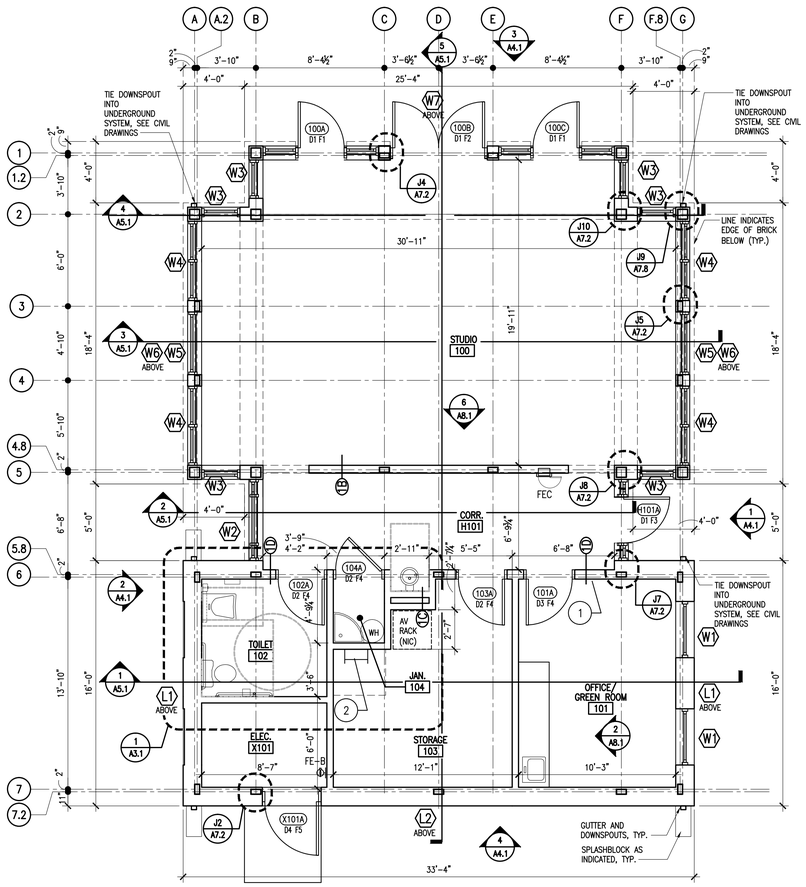

1 FLOOR PLAN
A1.1 SCALE: 1/4" = 1'-0"

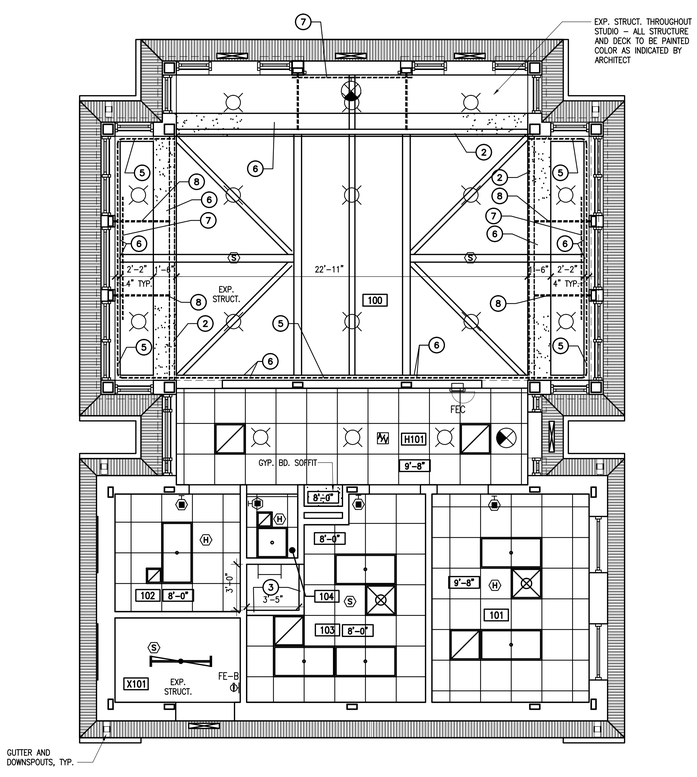

2 REFLECTED CEILING PLAN
A1.1 SCALE: 1/4" = 1'-0"

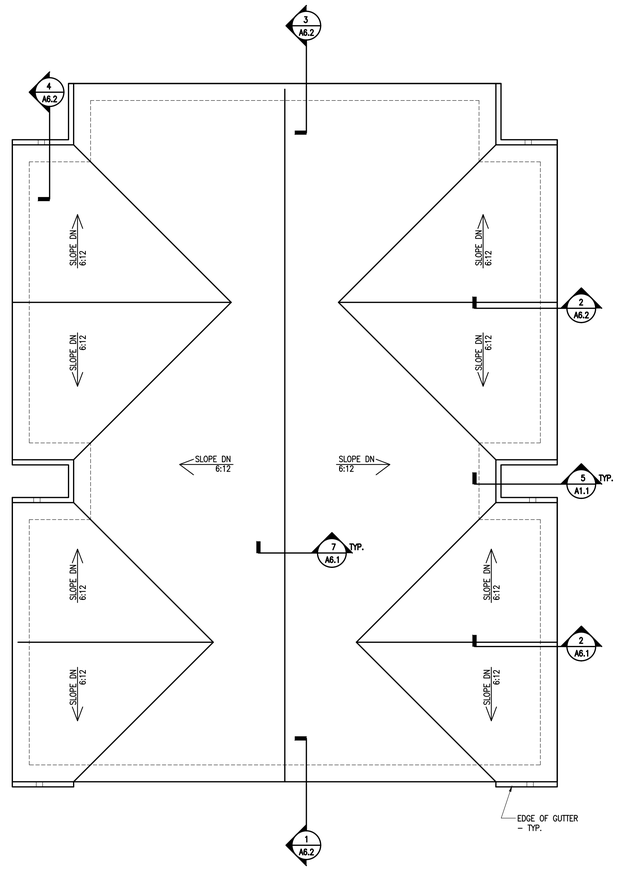

3 ROOF PLAN
A1.1 SCALE: 1/4" = 1'-0"

KEYNOTES:

1. TV MOUNTED ON WALL (BOTTOM OF TV AT 6'-8" AFF)
2. LADDER ACCESS TO HATCH TO ACCESS MEZZANINE MECHANICAL EQUIPMENT

GENERAL FLOOR PLAN NOTES:

1. UNLESS OTHERWISE NOTED, ALL PARTITION TYPES TO BE TYPE 1A (SEE SHEET A3.1 FOR DETAILS).
2. CONTRACTOR TO PROVIDE BLOCKING FOR ALL WALL MOUNTED DEVICES. COORDINATE WITH OWNER.
3. ALL DIMENSIONS ARE TO EITHER FACE OF GYPSUM BOARD, TO COLUMN CENTERLINES, FACE OF BLOCK VENEER, OR TO NOMINAL DIMENSIONS OF VENEER OPENINGS AT DOORS AND WINDOWS.
4. INTERIOR DOOR JAMBS ARE TO BE LOCATED 4" OFF CORNERS TYPICALLY FROM FACE OF FINISH TO EDGE OF DOOR JAMB UNLESS OTHERWISE INDICATED. DIMENSIONS INDICATED FOR DOORS ARE FROM FINISH FACE TO DOOR JAMB. BRING TO THE ARCHITECT'S ATTENTION ANY DOORS THAT ARE NOT CLEARLY LOCATED BEFORE PROCEEDING. REQUEST DIMENSIONS THROUGH RFI PROCESS.
5. CONTRACTOR TO FIELD VERIFY ALL CONDITIONS BEFORE PROCEEDING WITH WORK AND TO NOTIFY THE ARCHITECT IMMEDIATELY OF ANY DISCREPANCIES BEFORE PROCEEDING.
6. SEE A5.1 FOR WALL SECTION LOCATIONS.
7. SEE SHEET A8.1 FOR CONCRETE SCORING PATTERN AND PLACEMENT OF CONTROL JOINTS.

LEGEND:

- 3" x 4" DOWNLEADER WITH SPLASHBLOCK
- 3" x 4" DOWNLEADER, TIED INTO STORM DRAINAGE SYSTEM, SEE CIVIL
- FE-B — FIRE EXTINGUISHER (BRACKET MOUNTED): CLASS 4A (CLASS A, B AND C FIRES), 11,250 S.F. MAXIMUM FLOOR AREA SERVED BY EXTINGUISHER
- FEC — FIRE EXTINGUISHER (IN WALL MOUNTED CABINET): CLASS 4A (CLASS A, B AND C FIRES), 11,250 S.F. MAXIMUM FLOOR AREA SERVED BY EXTINGUISHER

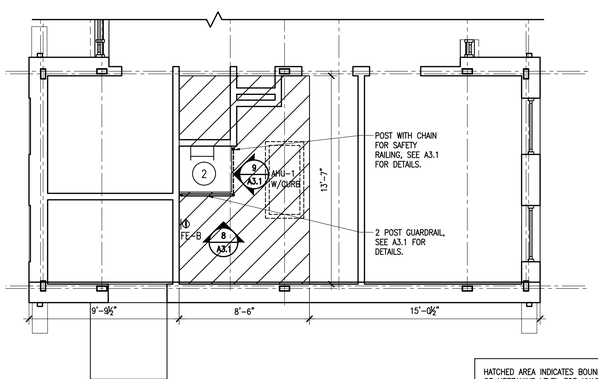

HATCHED AREA INDICATES BOUNDARIES OF MEZZANINE LEVEL FOR HVAC EQUIPMENT, SEE MECHANICAL FOR LAYOUT OF SPACE. SEE ELECTRICAL FOR LIGHTING, POWER, AND SYSTEMS REQUIREMENTS.

4 PARTIAL MECHANICAL MEZZANINE PLAN
A1.1 SCALE: 1/4" = 1'-0"

CEILING KEY NOTES

1. GYPSUM BOARD CEILING SOFFIT
2. TUBE STEEL GRID, SEE SECTIONS AND STRUCTURAL DRAWINGS FOR DETAILS
3. CEILING SOFFIT, 5/8" GYP. BD. ON EACH SIDE OF 3-5/8" METAL STUDS @16" o.c. – FRAMED DOWN FROM STRUCTURE ABOVE
4. PIPE GRID FOR STUDIO LIGHTS, SEE WALL SECTIONS FOR DETAILS
5. DASHED LINE INDICATES CURTAIN TRACK AND THEATRICAL CURTAINS IN SPACE. BASIS OF DESIGN: ROSEBRAND VELOUR CURTAINS, QUANTITY: 12 PANELS @ 9' WIDE, 9'-6" TALL. CURTAIN TRACK TO BE 71 LINEAR FEET OF CONTINUOUS TRACK WITH RADIUSED CORNERS TO ALLOW CURTAINS TO MOVE FREELY. SEE H1/A7.2, A8.1 AND SPECIFICATIONS FOR FURTHER DETAILS.
6. CEILING SOFFIT, 9'-8" AFF. WIDTH AT PERIMETER OF STUDIO 100 TO BE 4" FOR INSTALLATION OF CURTAIN TRACK. OTHER SOFFITS TO BE WIDTH DIMENSIONED.
7. STRUCTURAL PIPE ATTACHMENT FOR FUTURE BROADCAST LIGHTING – 8' LONG, CENTERED ABOVE WINDOWS AND ATTACHED TO TUBE ABOVE (EACH SIDE OF ROOM) – SEE STRUCTURAL
8. STRUCTURAL PIPE WELDED TO TUBE STRUCTURE AT 10'-10" AFF – SEE STRUCTURAL

REFLECTED CEILING PLAN LEGEND

- SUPPLY GRILLE
- RETURN GRILLE
- EXHAUST GRILLE
- FLUORESCENT FIXTURES
- FLUORESCENT STRIP FIXTURE
- 7'-8" CEILING HEIGHT INDICATOR
- (S) CEILING MOUNTED SMOKE DETECTOR
- (H) CEILING MOUNTED HEAT DETECTOR
- DOWNLIGHT
- WALL MOUNTED FIXTURE
- EXIT LIGHTS
- 2' X 2' SUSPENDED ACOUSTICAL PANEL CEILING SYSTEM
- PERFORATED SOFFIT PANELS, SEE A6.1 FOR DETAILS
- INTERIOR GYP. BD. CEILING FINISH
- CEILING MOUNTED FIRE ALARM SPEAKER
- CEILING OR WALL MOUNTED OCCUPANCY SENSOR

GENERAL CEILING NOTES

1. SEE FINISH SCHEDULE FOR SYSTEM AND FINISH TYPES.
2. FINAL LIGHT FIXTURE LAYOUTS IN MECHANICAL AND ELECTRICAL ROOMS SHALL BE COORDINATED BY CONTRACTOR WITH EQUIPMENT, DUCTWORK, AND PIPING.
3. LIGHTING FIXTURES TO BE MOUNTED WITH RESPECT TO THE SUSPENDED GRID SYSTEM AS SHOWN. ALL DEVICES (SMOKE DETECTORS, ETC.) ARE TO BE CENTERED IN THE GYPSUM BOARD CEILING AREA OR 2'x2' TILE AS SHOWN.
4. ALL SUSPENDED ACOUSTICAL CEILING GRIDS ARE TO BE CENTERED IN THE CEILING / ROOM AS SHOWN, UNLESS OTHERWISE SHOWN
5. GENERAL CONTRACTOR MUST COORDINATE ALL UTILITY SYSTEM PIPING, DUCTWORK, CONDUIT, EQUIPMENT, DEVICES, ETC. WITH ARCHITECTURAL DRAWINGS INCLUDING REFLECTED CEILING PLANS AND BUILDING SECTIONS. PREPARE COORDINATION DRAWINGS OF ALL SYSTEMS FOR REVIEW AND APPROVAL PRIOR TO INSTALLATION OF SYSTEM COMPONENTS OR CEILING GRID WHERE LIMITED SPACE AVAILABLE NECESSITATES MAXIMUM UTILIZATION OF SPACE. INDICATED LOCATIONS OF ALL COMPONENTS ARE APPROXIMATE AND MUST BE COORDINATED WITH ALL SUBCONTRACTORS DURING SUBMITTALS AND PRIOR TO INSTALLATION. ANY MODIFICATIONS TO LOCATIONS INDICATED MUST BE APPROVED BY ARCHITECT.
6. GENERAL CONTRACTOR MUST COORDINATE ALL CEILING MOUNTED EQUIPMENT, DEVICES, FIXTURES, AND GRILLS WITH REFLECTED CEILING PLANS. INDICATED LOCATIONS OF ALL COMPONENTS ARE APPROXIMATE AND MUST BE COORDINATED WITH ALL SUBCONTRACTORS DURING SUBMITTALS AND PRIOR TO INSTALLATION. ANY MODIFICATIONS TO LOCATIONS MUST BE APPROVED BY ARCHITECT.
7. SEE ELECTRICAL DRAWINGS FOR FULL SCOPE OF ELECTRICAL CEILING AND WALL MOUNTED DEVICES.

GENERAL ROOF PLAN NOTES:

1. PROVIDE STANDARD RIDGE AND VALLEY DETAILS PER MANUFACTURER FOR NON-VENTILATED STANDING SEAM METAL ROOF AS SPECIFIED IN THE SPECIFICATIONS. CONTRACTOR TO PROVIDE SHOP DRAWINGS WITH STANDARD RIDGE AND VALLEY DETAILS FOR APPROVAL PRIOR TO COMMENCEMENT OF ROOF INSTALLATION.

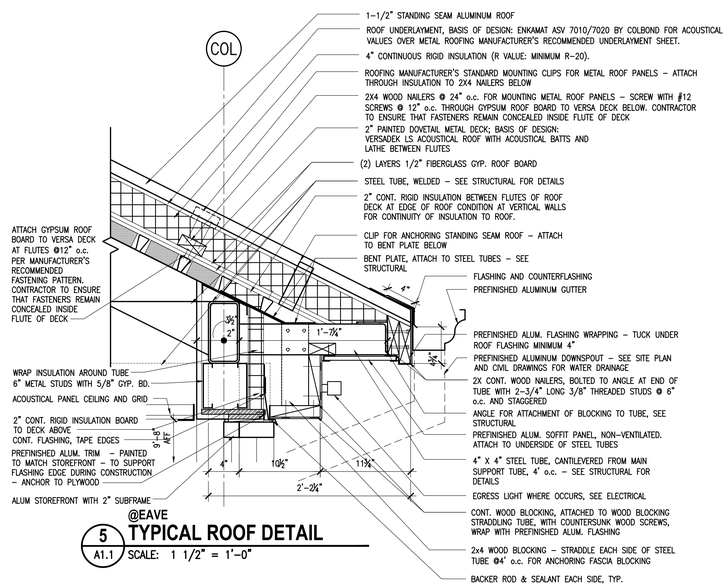

5 TYPICAL ROOF DETAIL
A1.1 SCALE: 1 1/2" = 1'-0"

The Boudreaux Group

The Boudreaux Group, Inc.
1330 Lady St., Suite 500 (29201)
P.O. Box 5092
Columbia, SC 29250
803 799 0247 p
803 771 0844 f
info@boudreauxgroup.com

Interdisciplinary Design Architecture Interiors Planning

A/E Seal

STATE OF SOUTH CAROLINA
ROBERT [illegible] LAND
5048
10-01-14
REGISTERED ARCHITECT

A/E Seal

STATE OF SOUTH CAROLINA
The Boudreaux Group, Inc.
Columbia, South Carolina
8-77010
REGISTERED ARCHITECTS

Project Title
UNIVERSITY OF SOUTH CAROLINA
SCHOOL OF JOURNALISM
BROADCAST STUDIO

BID DOCUMENTS

COLUMBIA, SOUTH CAROLINA

Project No. 1302-12-3
Drawn By KGQ
Checked By DAH
Date 10.31.14

Revisions
No. Name Date

This drawing and the design thereon is the property of The Boudreaux Group, Inc. The reproduction, copies or any use whatsoever, except as authorized in writing, is prohibited. Any unauthorized use will be subject to legal action by The Boudreaux Group.

Drawing Title
FLOOR PLANS, REFLECTED CEILING PLAN, AND ROOF PLAN AND DETAILS

Drawing No.
A1.1

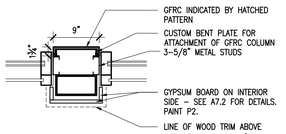

GFRC "A"
BETWEEN WINDOWS
PLAN VIEW

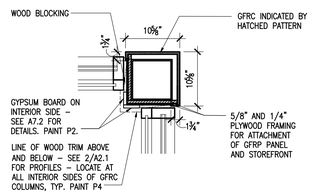

GFRC "B"
OUTER CORNER
PLAN VIEW

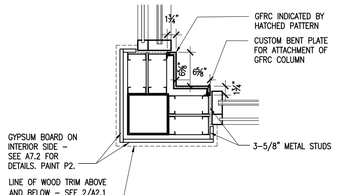

GFRC "C"
INNER CORNER #1
PLAN VIIEW

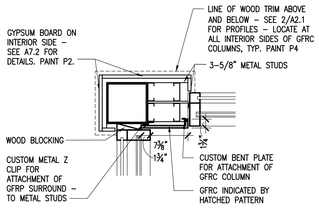

GFRC "D"
INNER CORNER #2
PLAN VIEW

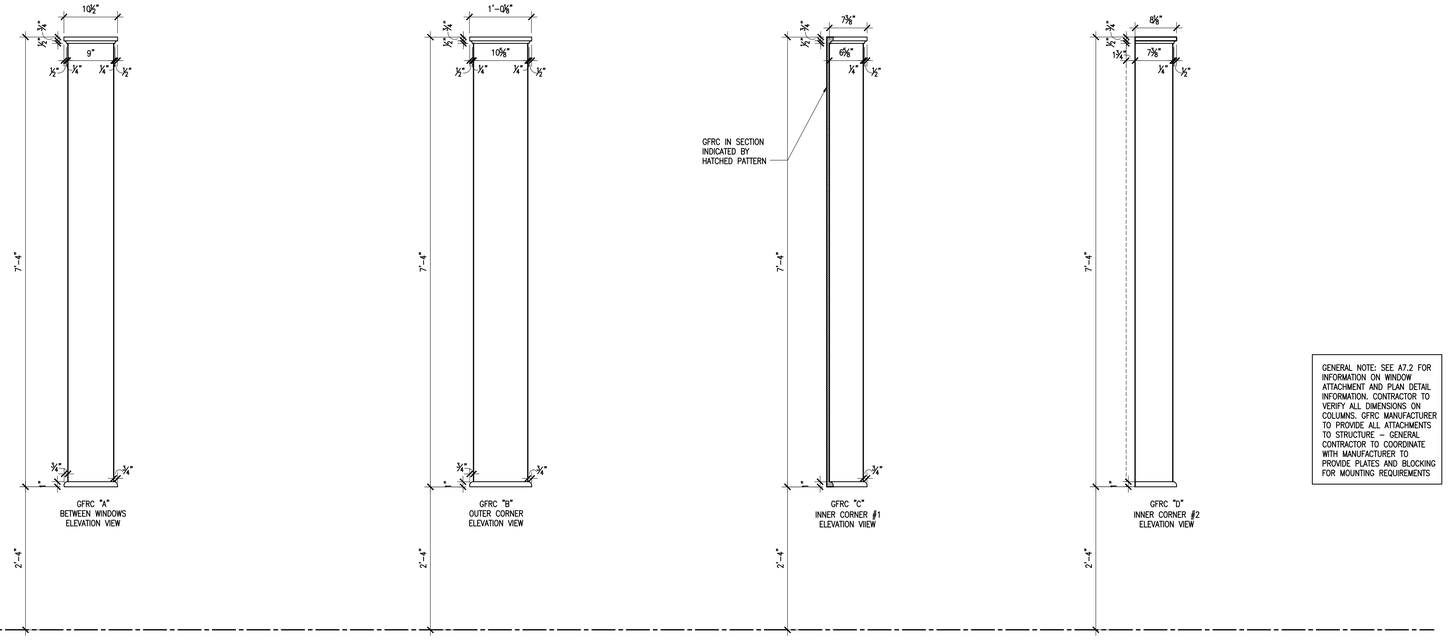

GENERAL NOTE: SEE A7.2 FOR INFORMATION ON WINDOW ATTACHMENT AND PLAN DETAIL INFORMATION. CONTRACTOR TO VERIFY ALL DIMENSIONS ON COLUMNS. GFRC MANUFACTURER TO PROVIDE ALL ATTACHMENTS TO STRUCTURE – GENERAL CONTRACTOR TO COORDINATE WITH MANUFACTURER TO PROVIDE PLATES AND BLOCKING FOR MOUNTING REQUIREMENTS

1 GFRC DIMENSIONS
A2.1 SCALE: 1" = 1'-0"

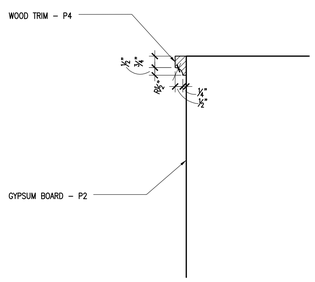

@TOP - GFRC LOCATIONS
2 WOOD TRIM - INTERIOR
A2.1 SCALE: 3" = 1'-0"

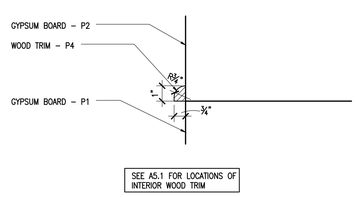

@BOTTOM - GFRC LOCATIONS
3 WOOD TRIM - INTERIOR
A2.1 SCALE: 3" = 1'-0"

The Boudreaux Group
The Boudreaux Group, Inc.
1330 Lady St., Suite 300 (29201)
P.O. Box 5905
Columbia, SC 29250
803 799 0241 P
803 771 6844 F
info@theboudreauxgroup.com
Interdisciplinary Design Architecture Interiors Planning

A/E Seal
STATE OF SOUTH CAROLINA
ROBERT R. HOLLEMAN
5046
10-01-14
REGISTERED ARCHITECT

A/E Seal
STATE OF SOUTH CAROLINA
The Boudreaux Group, Inc.
Columbia, South Carolina
B-77010
REGISTERED ARCHITECTS

Project Title
UNIVERSITY OF SOUTH CAROLINA
SCHOOL OF JOURNALISM
BROADCAST STUDIO

BID DOCUMENTS
COLUMBIA, SOUTH CAROLINA

Project No.
UofSC 12-3
Drawn By
KGQ
Checked By
RRH
Date
10.31.14

No drawing, and its design, thereon is to be used for any purpose other than the construction, thereto, of the project identified herein without written consent of The Boudreaux Group. Unauthorized use of this document will be subject to legal prosecution to the fullest extent by The Boudreaux Group.

Revisions
No. Name Date

Drawing Title
GFRC COLUMN DETAILS

Drawing No.
A2.1

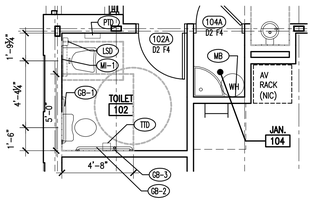

1 A3.1 ENLARGED RESTROOM PLAN
SCALE: 1/4" = 1'-0"

GENERAL NOTE:
1. PROVIDE PAPER TOWEL DISPENSER, MIRRORS, AND LOTION SOAP DISPENSER AT OFFICE 101 – SEE INTERIOR ELEVATIONS FOR LOCATIONS.
2. PROVIDE COAT HOOK ON BACK OF TOILET DOOR. MOUNT HOOKS AT 60" A.F.F.

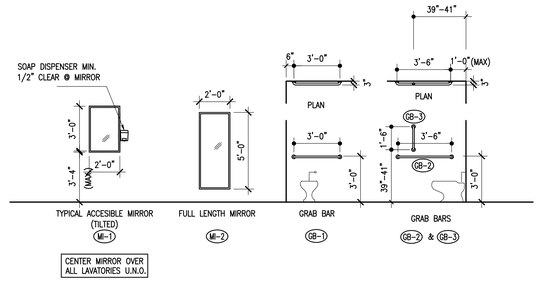

2 A3.1 TYPICAL TOILET ACCESSORIES MOUNTING HEIGHTS
SCALE: 1/4" = 1'-0"

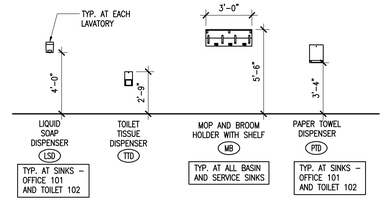

3 A3.1 PLUMBING FIXTURE MOUNTING HEIGHTS
SCALE: 1/4" = 1'-0"

PLUMBING FIXTURE MOUNTING HEIGHTS	
WATER CLOSET – STANDARD	15" AFF TO TOP OF TOILET SEAT
WATER CLOSET – ACCESSIBLE	
LAVATORY	34" AFF TO TOP OF APRON 27" AFF TO BOTTOM OF APRON
DRINKING FOUNTAIN – STANDARD	40" AFF TO LIP
DRINKING FOUNTAIN – ACCESSIBLE	36" AFF TO SPOUT
URINAL – STANDARD	24" TO TOP OF RIM
URINAL – ACCESSIBLE	17" AFF TO TOP OF RIM

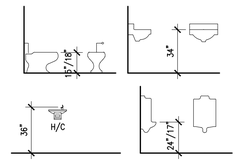

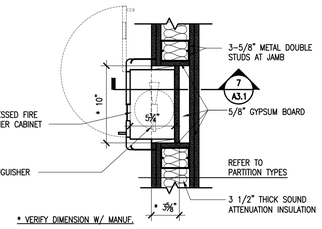

@ TYP. FIRE EXTINGUISHER CAB. IN STUD WALL
6 A3.1 PLAN DETAIL
SCALE: 1 1/2" = 1'-0"

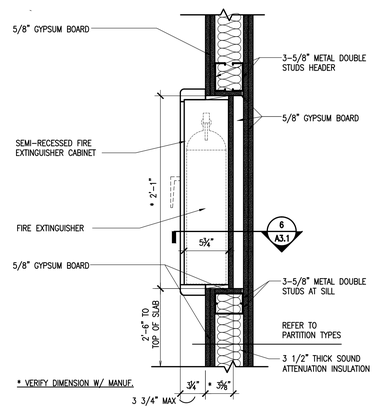

@ TYP. FIRE EXTINGUISHER CAB. IN STUD WALL
7 A3.1 SECTION DETAIL
SCALE: 1 1/2" = 1'-0"

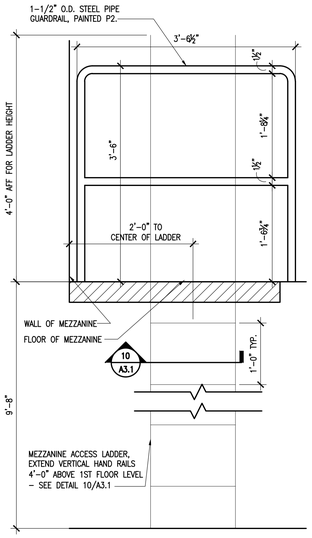

@ MEZZANINE
8 A3.1 RAILING ELEVATION
SCALE: 1" = 1'-0"

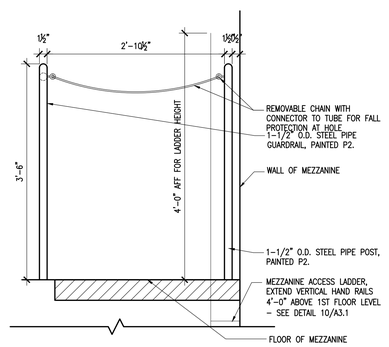

@ MEZZANINE
9 A3.1 RAILING ELEVATION
SCALE: 1" = 1'-0"

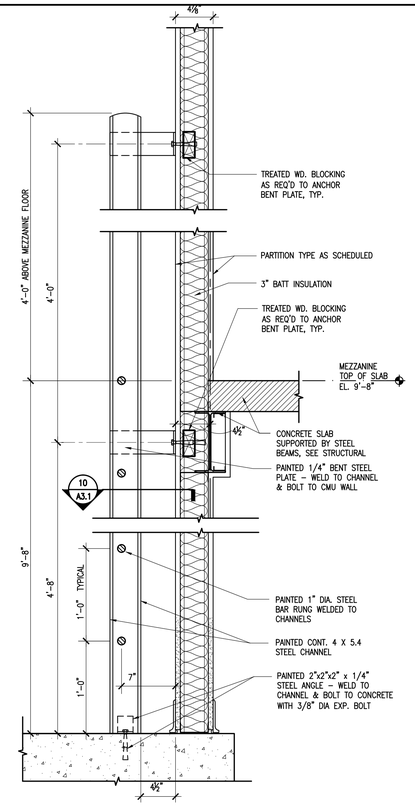

@ LADDER
11 A3.1 SECTION DETAIL
SCALE: 1 1/2" = 1'-0"

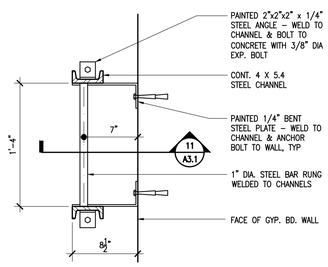

@ LADDER
10 A3.1 PLAN SECTION DETAIL
SCALE: 1 1/2" = 1'-0"

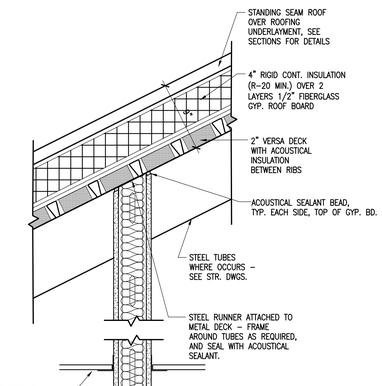

1A METAL STUD PARTITION
SCALE: 1 1/2" = 1'-0"

GENERAL NOTES:
1. USE MOISTURE RESISTANT GYPSUM BOARD AT RESTROOMS.
2. PARTITION TYPE 1A: WHERE TUBE COLUMNS OCCUR, SKIM PAST TUBE COLUMN WITH 1/2" GYP. BD. EACH SIDE, THEN RETURN TO WALL CONSTRUCTION AS INDICATED ABOVE.

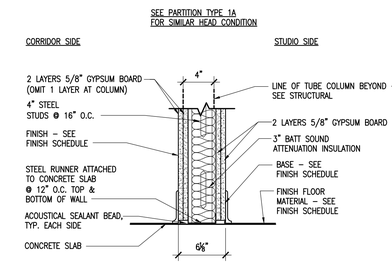

1B METAL STUD PARTITION
SCALE: 1 1/2" = 1'-0"

1D METAL STUD PARTITION

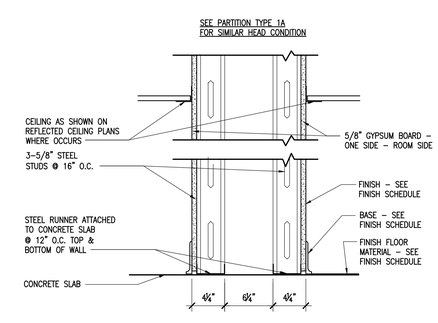

1C METAL STUD PARTITION
SCALE: 1 1/2" = 1'-0"

5 A3.1 PARTITION TYPES
SCALE: 1 1/2" = 1'-0"

The Boudreaux Group
Interdisciplinary Design Architecture Interiors Planning
The Boudreaux Group, Inc.
1330 Lady St., Suite 500 (29201)
P.O. Box 5092
Columbia, SC 29250
803 799 0247 p
803 771 8844 f
info@boudreauxgroup.com

A/E Seal
STATE OF SOUTH CAROLINA
ROBERT [illegible]
5048
10-01-13
REGISTERED ARCHITECT

A/E Seal
STATE OF SOUTH CAROLINA
The Boudreaux Group, Inc.
Columbia, South Carolina
8-77010
REGISTERED ARCHITECTS

Project Title
UNIVERSITY OF SOUTH CAROLINA
SCHOOL OF JOURNALISM
BROADCAST STUDIO

BID DOCUMENTS
COLUMBIA, SOUTH CAROLINA

Project No. 1302-3
Drawn By EGW
Checked By GJB
Date 10.31.14

This drawing and the design thereon are the property of The Boudreaux Group, Inc. The reproduction, copying, or other use of this drawing without the written consent of The Boudreaux Group, Inc. is prohibited and will be subject to legal action by The Boudreaux Group.

Revisions		
No.	Name	Date

Drawing Title
ENLARGED FLOOR PLANS, PARTITION TYPES, AND MISC. DETAILS

Drawing No.
A3.1

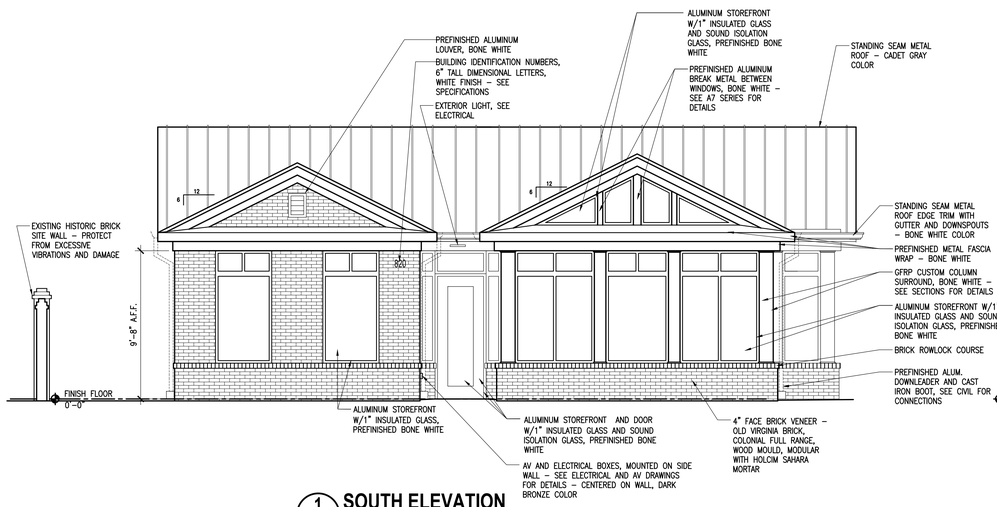

1 SOUTH ELEVATION
A4.1 SCALE: 1/4" = 1'–0"

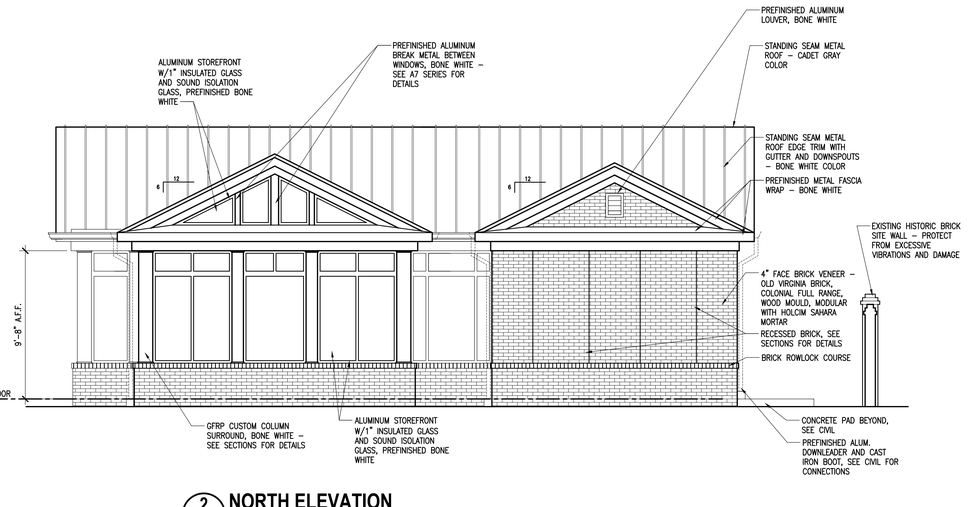

2 NORTH ELEVATION
A4.1 SCALE: 1/4" = 1'–0"

ELEVATION GENERAL NOTES:

1. SOUND CONTROL EXTERIOR DOOR: BASIS OF DESIGN – OVERLY DOOR COMPANY, MODEL 4695163 CUSTOM SOUND DOOR ASSEMBLY WITH MIN. 46 STC SOUND RATING, CUSTOMIZED FOR EXTERIOR APPLICATION, SIZES, GLAZING, AND ATTACHMENT TO ALUMINUM STOREFRONT. PREFINISHED BONE WHITE TO MATCH STOREFRONT.
2. PROVIDE A FULL HEIGHT MOCKUP PANEL AS INDICATED IN THE SPECIFICATIONS.

EXTERIOR FINISH NOTES

ALL COLORS AND PRODUCTS ARE BASIS OF DESIGN. SEE SPECIFICATIONS FOR DETAILS FOR SUBSTITUTIONS AND APPROVALS OF OTHER PRODUCTS. ARCHITECT TO SELECT FINAL COLORS FOR MATERIALS LISTED FROM MANUFACTURER'S FULL LINE OF COLORS.

1. FIELD BRICK: OLD VIRGINIA BRICK, COLONIAL FULL RANGE, WOOD MOULD, MODULAR 7 5/8" L X 2 1/4" H X 3 5/8" W
2. MORTAR FOR FIELD BRICK: SAHARA BY LAFARGE
3. NEW WINDOWS TO BE ALUMINUM STOREFRONT, PREFINISHED BONE WHITE AND WITH 1–INCH INSULATED CLEAR LOW E GLASS. SEE WINDOW TYPES FOR DETAILS, GLAZING INFORMATION, AND LOCATIONS OF ADDITIONAL SOUND ISOLATION FRAMES ON INTERIOR.
4. ROOFING MATERIAL: GARLAND COMPANY STANDING SEAM METAL ROOF, CADET GRAY ON MAIN ROOF AND BONE WHITE ON EDGE TRIM TO MATCH WINDOWS
5. SMALL LOUVERS AND BRICK VENTS IN BRICK TO BE PAINTED BONE WHITE TO MATCH WINDOWS AS SELECTED BY ARCHITECT
6. FIELD PAINT COLOR OF STEEL LINTELS AT WINDOWS AND DOORS TO MATCH DOOR/WINDOW TRIM COLOR AS SELECTED BY ARCHITECT
7. ALUM. SOFFIT PANELS – BONE WHITE, COLOR SELECTED BY ARCHITECT
8. BRICK PAVERS: PINE HALL BRICK, PATHWAY RED, MODULAR
9. PREFINISHED ALUMINUM GUTTERS, DOWNSPOUTS, AND FASCIA TRIM TO BE BONE WHITE AS SELECTED BY ARCHITECT.
10. GFRP CUSTOM COLUMN SURROUNDS TO BE BONE WHITE AS SELECTED BY ARCHITECT.

3 EAST ELEVATION
A4.1 SCALE: 1/4" = 1'–0"

4 WEST ELEVATION
A4.1 SCALE: 1/4" = 1'–0"

LEGEND:

CJ
CONTROL JOINT

The Boudreaux Group
Interdisciplinary Design Architecture Interiors Planning
The Boudreaux Group, Inc.
1330 Lady St., Suite 500 (29201)
P.O. Box 5905
Columbia, SC 29250
803 799 0427 p
803 771 0844 f
info@boudreauxgroup.com

STATE OF SOUTH CAROLINA
ROBERT J. TANKERSLEY
5048
10-01-13
REGISTERED ARCHITECT
A/E Seal

STATE OF SOUTH CAROLINA
The Boudreaux Group, Inc.
Columbia, South Carolina
8-77010
REGISTERED ARCHITECTS
A/E Seal

Project Title
UNIVERSITY OF SOUTH CAROLINA
SCHOOL OF JOURNALISM
BROADCAST STUDIO

BID DOCUMENTS
COLUMBIA, SOUTH CAROLINA

Revisions No.	Name	Date

Project No. 1302.12–3
Drawn By KGQ
Checked By TAM
Date 10.31.14

This drawing and the design thereon are the property of The Boudreaux Group, Inc. The reproduction, copying, or other use of this drawing without written consent of The Boudreaux Group, Inc. is prohibited and any infringement will be subject to legal prosecution by The Boudreaux Group.

Drawing Title
EXTERIOR ELEVATIONS

Drawing No.
A4.1

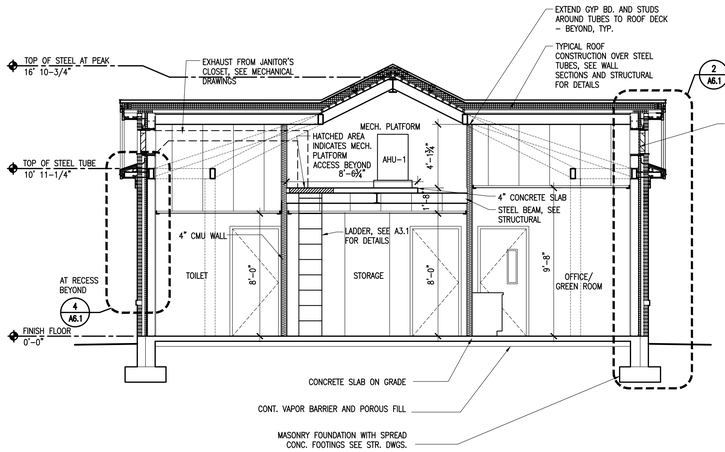

1 BUILDING SECTION
A5.1 SCALE: 1/4" = 1'-0"

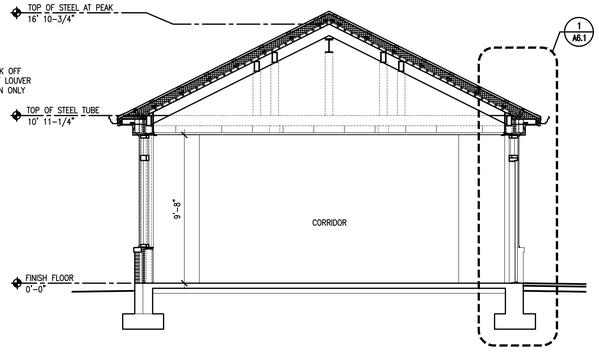

2 BUILDING SECTION
A5.1 SCALE: 1/4" = 1'-0"

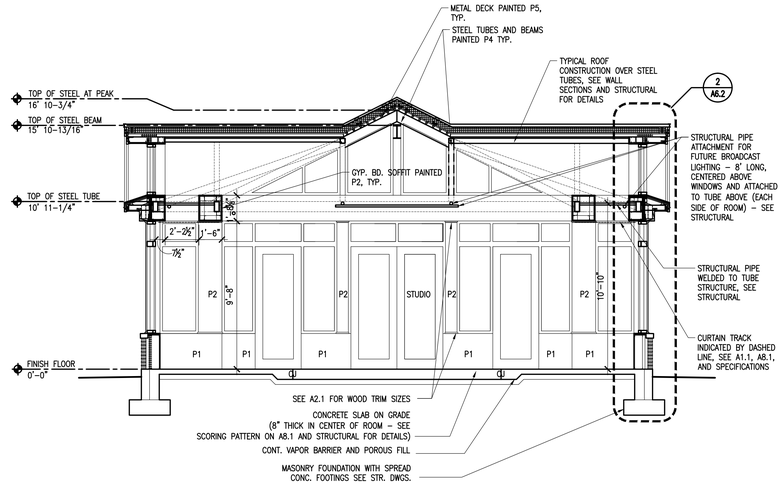

3 BUILDING SECTION
A5.1 SCALE: 1/4" = 1'-0"

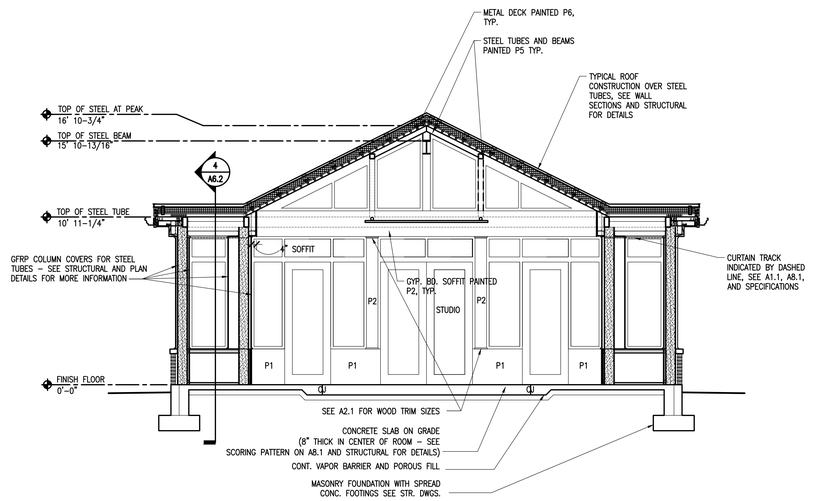

4 BUILDING SECTION
A5.1 SCALE: 1/4" = 1'-0"

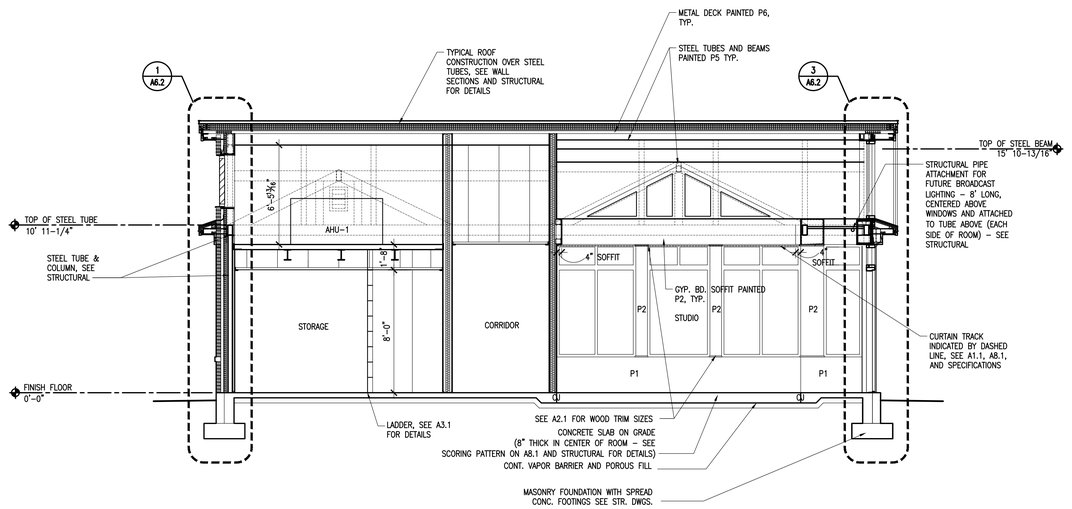

5 BUILDING SECTION
A5.1 SCALE: 1/4" = 1'-0"

The Boudreaux Group
Interdisciplinary Design Architecture Interiors Planning
The Boudreaux Group, Inc.
1330 Lady St., Suite 500 (29201)
P.O. Box 5605
Columbia, SC 29250
803 799 0247 p
803 771 0844 f
info@boudreauxgroup.com

A/E Seal
STATE OF SOUTH CAROLINA
ROBERT CHRISTOPHER HAND
5048
REGISTERED ARCHITECT
10-01-14

A/E Seal
STATE OF SOUTH CAROLINA
The Boudreaux Group, Inc.
Columbia, South Carolina
C-7010
REGISTERED ARCHITECTS

Project Title
UNIVERSITY OF SOUTH CAROLINA
SCHOOL OF JOURNALISM
BROADCAST STUDIO
BID DOCUMENTS
COLUMBIA, SOUTH CAROLINA

Project No. 13-3
Drawn By KCQ
Checked By CHH
Date 10.31.14

This drawing and the design thereon are the property of The Boudreaux Group, Inc. The reproduction, copying or other use without the written consent of The Boudreaux Group, Inc. is prohibited. Any unauthorized use is to be construed as an infringement of copyright. © 2014 The Boudreaux Group

Revisions
No. Name Date

Drawing Title
BUILDING SECTIONS

Drawing No.
A5.1

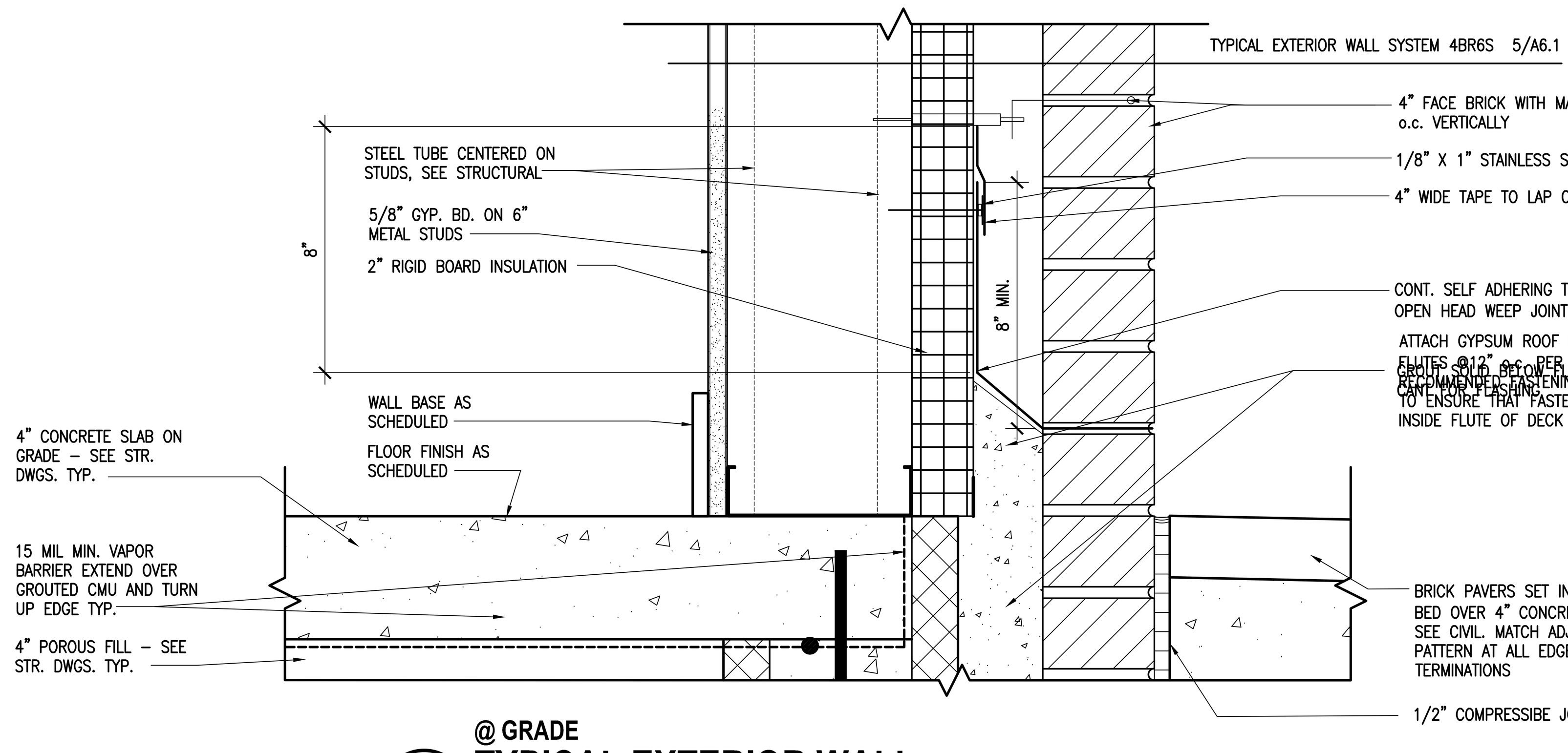

@ GRADE
6 TYPICAL EXTERIOR WALL
A6.1 SCALE: 3" = 1'–0"

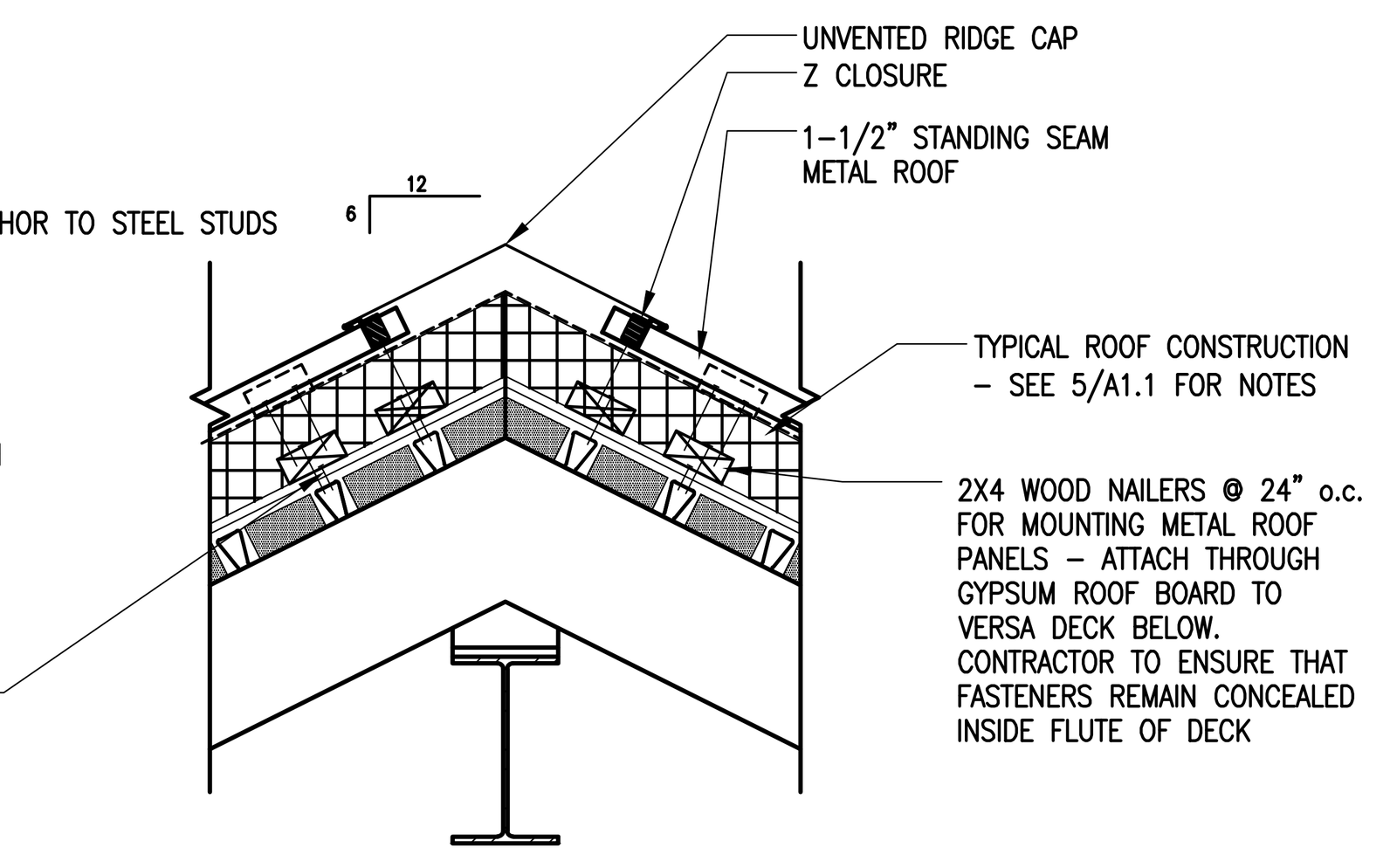

AT ROOF RIDGE
7 TYPICAL ROOF DETAIL
A6.1 SCALE: 1" = 1'–0"

GENERAL CONSTRUCTION NOTE FOR EXTERIOR DETAILS (A6, A7 SERIES OF DRAWINGS):
ALL PLYWOOD LOCATED ON EXTERIOR WALLS TO BE EXTERIOR RATED PLYWOOD. ALL NAILERS, BLOCKING, AND WOOD FRAMING AT EXTERIOR WALLS IS TO BE PRESSURE TREATED WOOD.

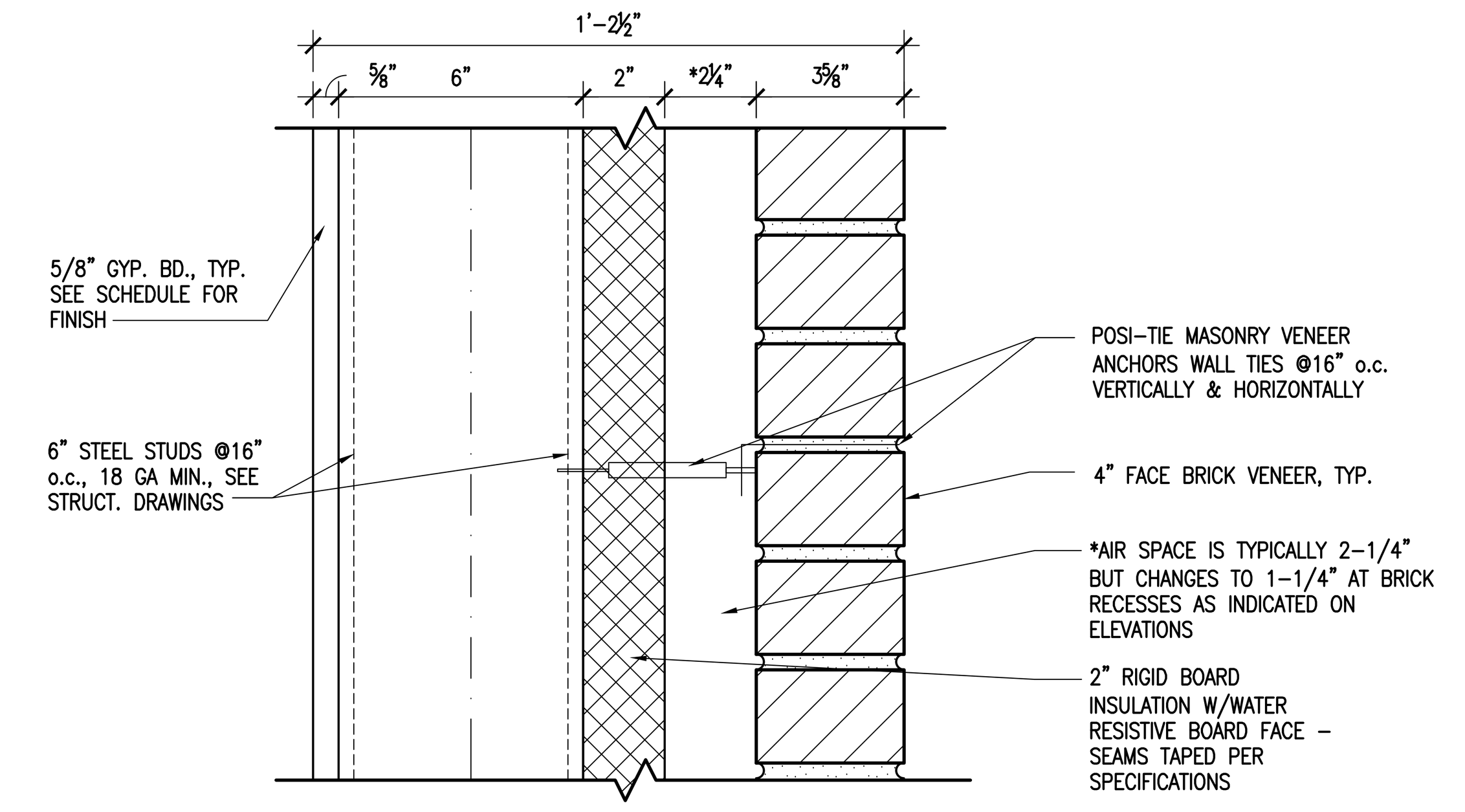

4BR6S SECTION DETAIL @
5 TYPICAL EXTERIOR WALL
A6.1 SCALE: 3" = 1'–0"

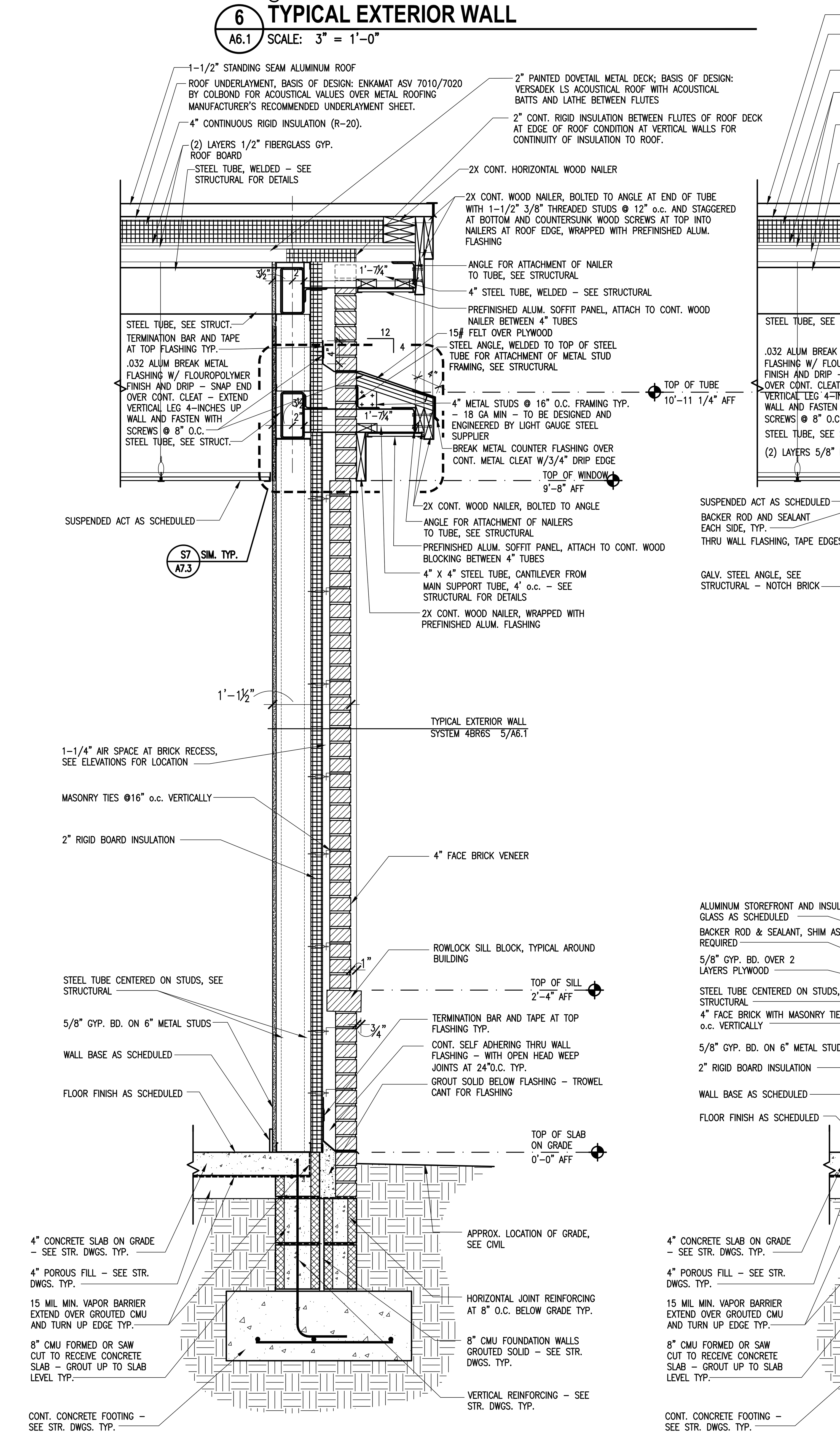

AT BRICK RECESS
4 TYPICAL WALL SECTION
A6.1 SCALE: 1" = 1'–0"

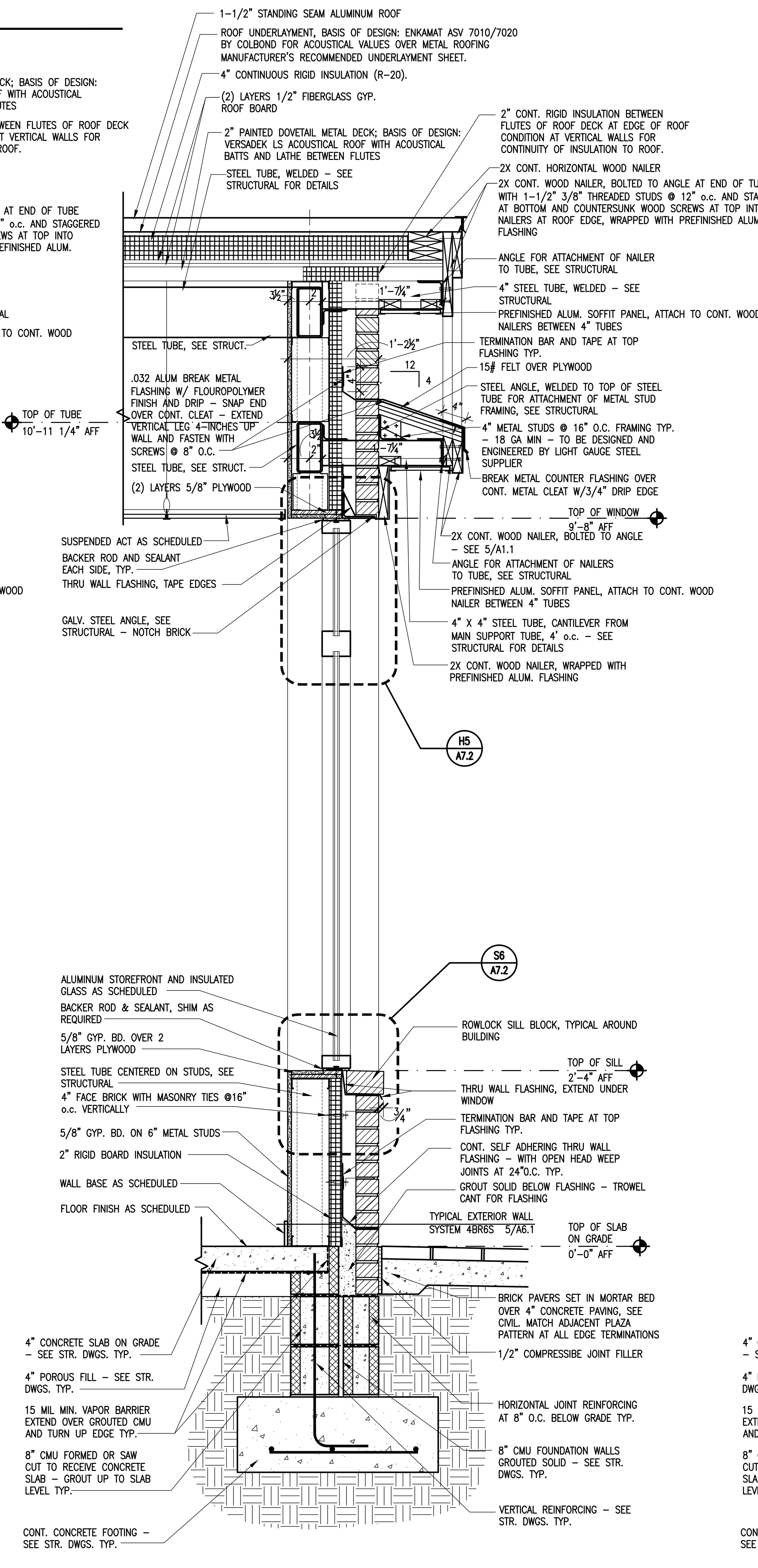

AT WINDOW
3 TYPICAL WALL SECTION
A6.1 SCALE: 1" = 1'–0"

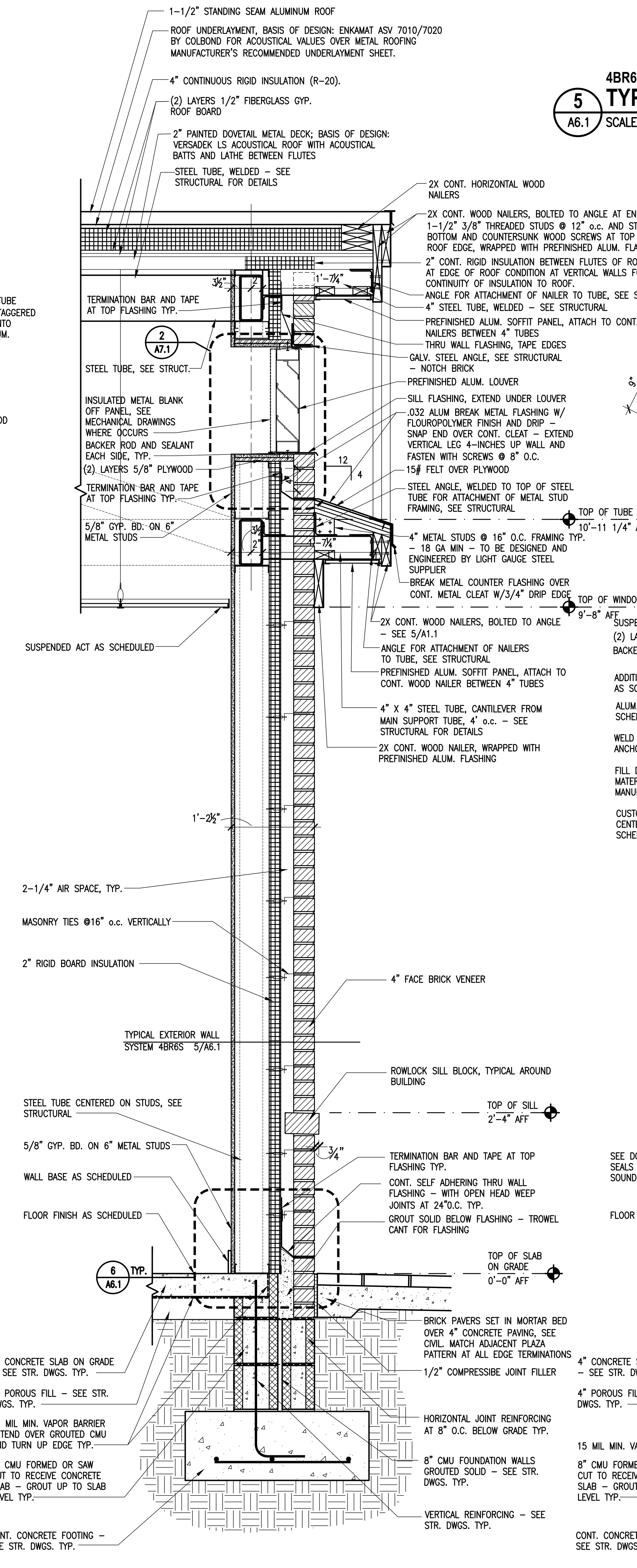

2 TYPICAL WALL SECTION
A6.1 SCALE: 1" = 1'–0"

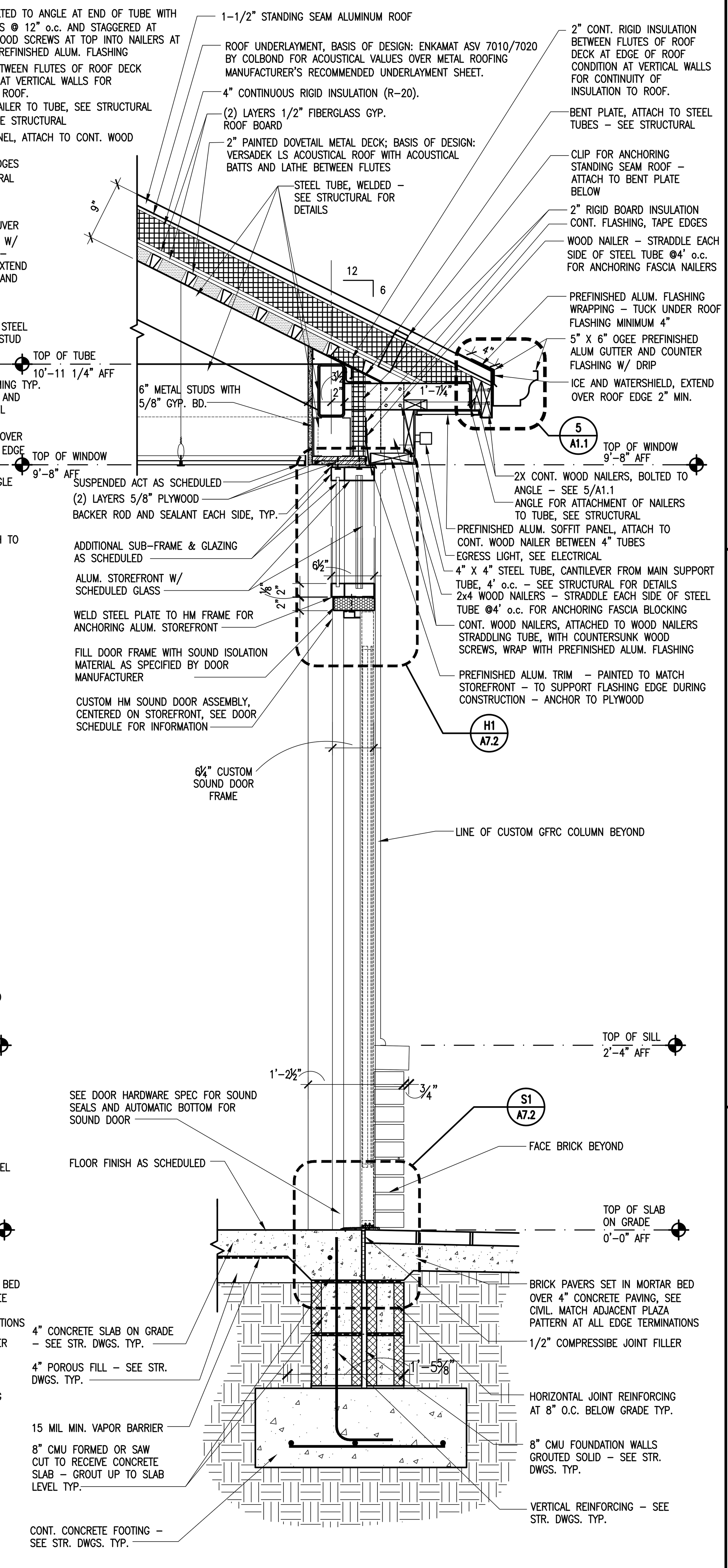

AT SOUTH ENTRY DOOR
1 TYPICAL WALL SECTION
A6.1 SCALE: 1" = 1'–0"

The Boudreaux Group
The Boudreaux Group, Inc.
1330 Lady St., Suite 500 (29201)
P.O. Box 5695
Columbia, SC 29250
803 799 0247 p
803 771 6844 f
info@boudreauxgroup.com
Interdisciplinary Design Architecture Interiors Planning

A/E Seal: STATE OF SOUTH CAROLINA – ROBERT RANDALL HUTTO – COLUMBIA, SC – 5046 – REGISTERED ARCHITECT – 10-01-14

A/E Seal: STATE OF SOUTH CAROLINA – The Boudreaux Group, Inc. – Columbia, South Carolina – B-77010 – REGISTERED ARCHITECTS

Project Title
UNIVERSITY OF SOUTH CAROLINA SCHOOL OF JOURNALISM BROADCAST STUDIO

BID DOCUMENTS

COLUMBIA, SOUTH CAROLINA

Revisions		
No.	Name	Date

Project No. U–646–12–3
Drawn By KGQ
Checked By RRH
Date 10.31.14

This drawing and the design thereon are the property of The Boudreaux Group, Inc. The reproduction, copying, or use of this drawing without the written consent of The Boudreaux Group, Inc. is prohibited and any infringement will be subject to legal action. Copyright © 2001 The Boudreaux Group

Drawing Title
WALL SECTIONS

Drawing No.
A6.1

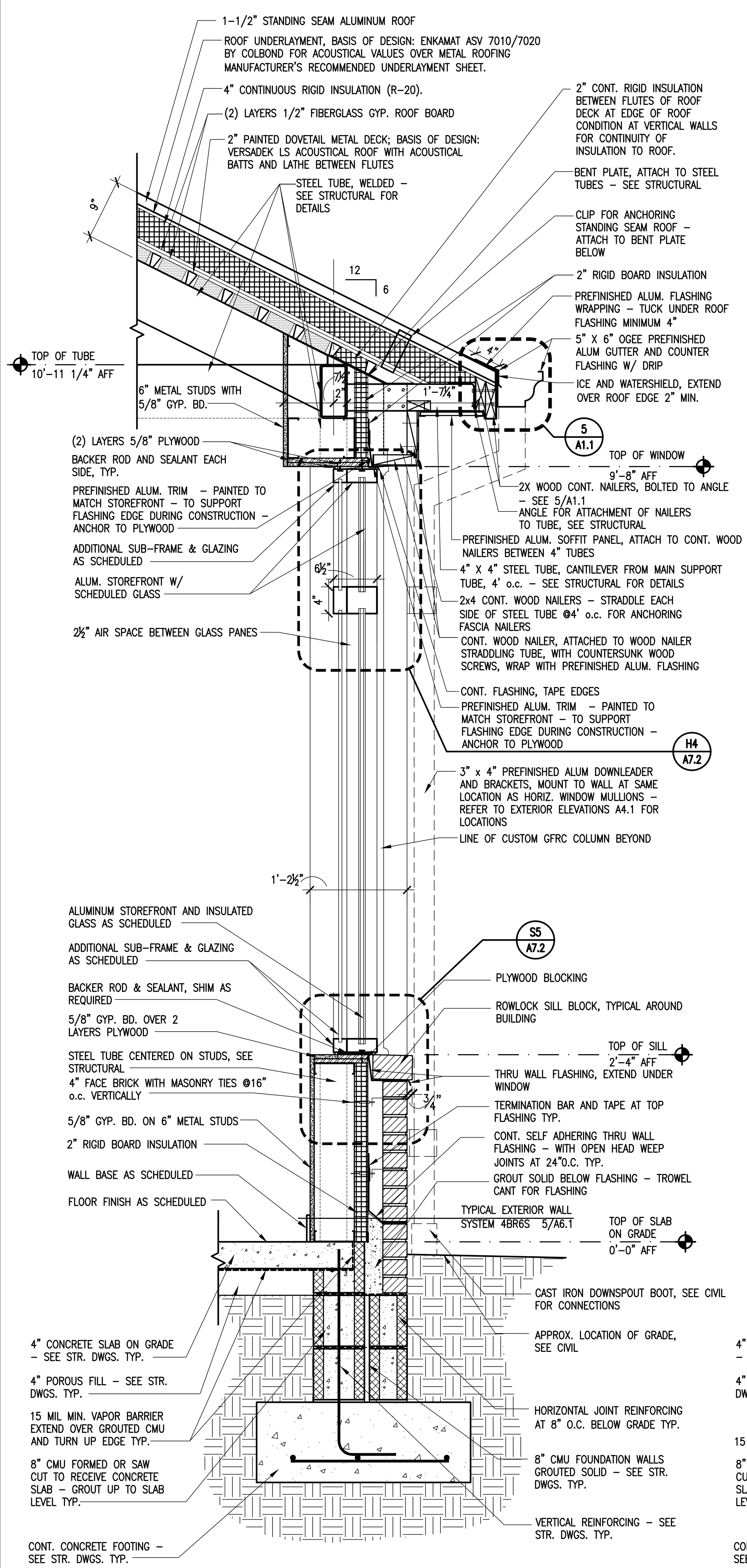

AT WEST WALL WINDOW
4 TYPICAL WALL SECTION
A6.2 SCALE: 1" = 1'–0"

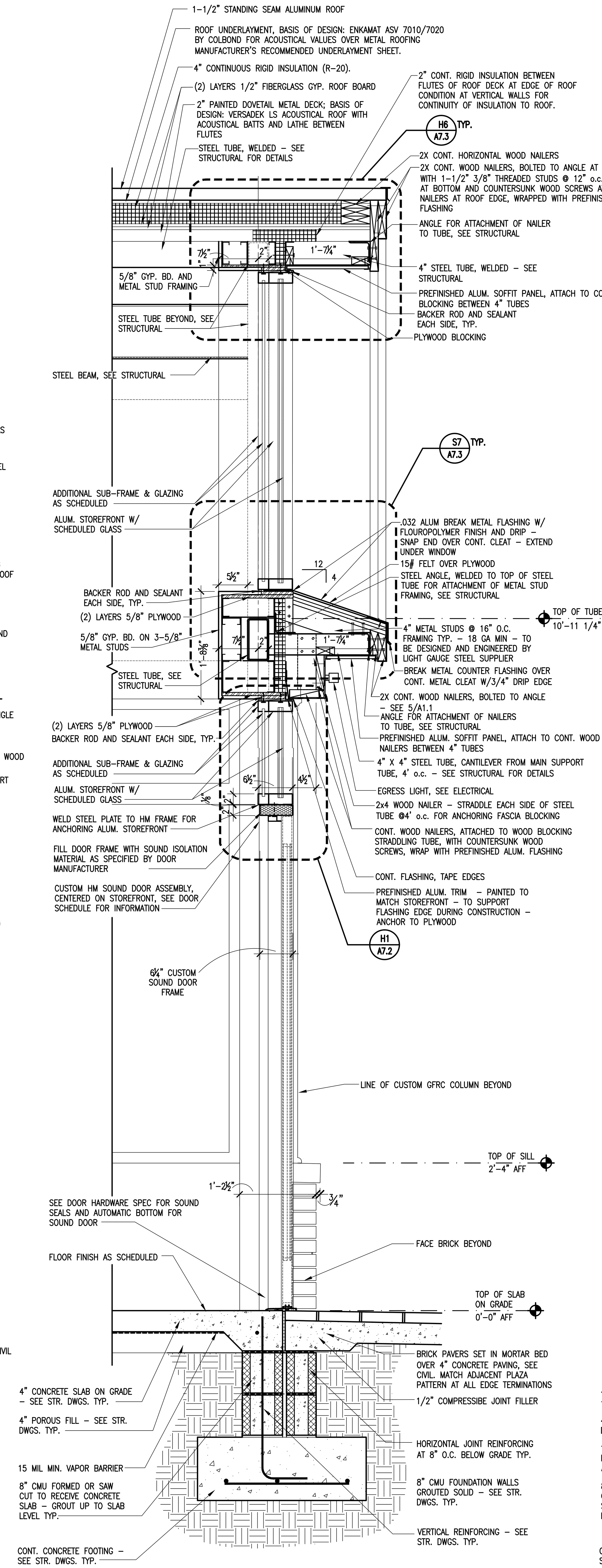

AT WEST WALL ENTRY DOOR
3 TYPICAL WALL SECTION
A6.2 SCALE: 1" = 1'–0"

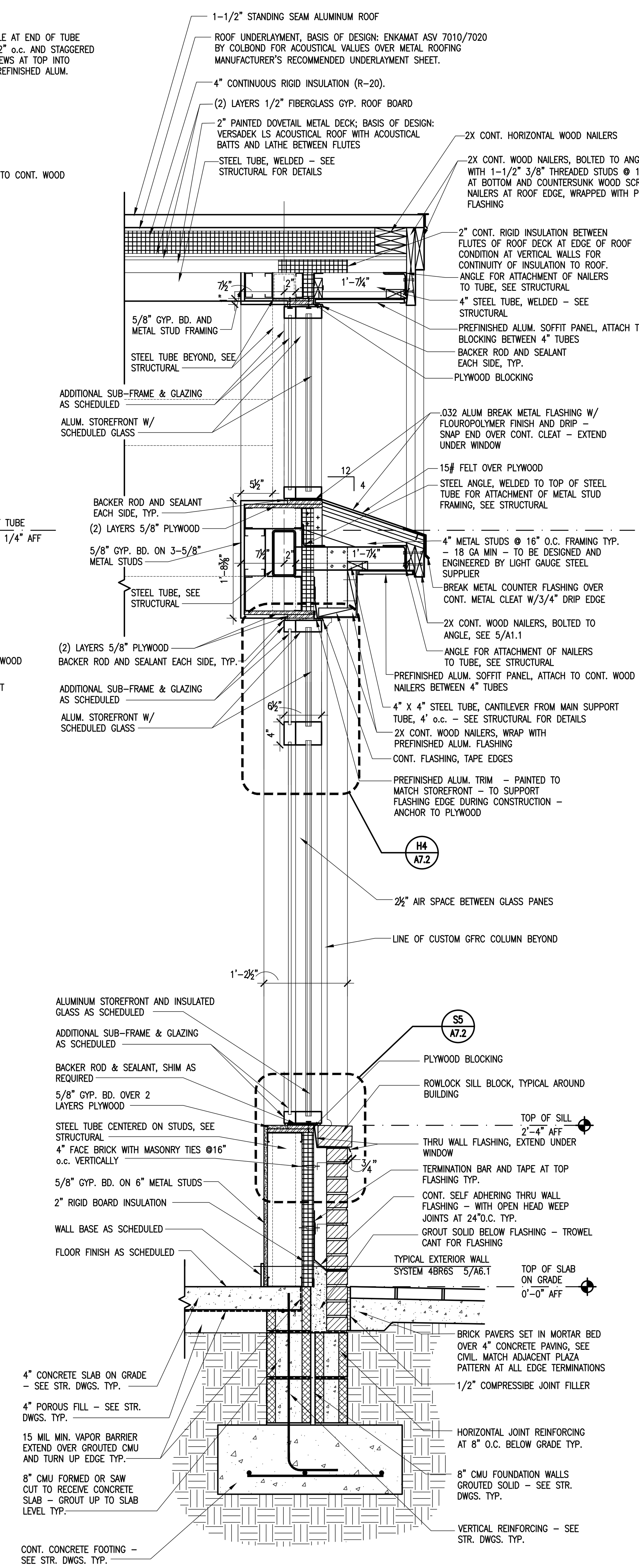

AT SOUTH WALL BROADCAST STUDIO
2 TYPICAL WALL SECTION
A6.2 SCALE: 1" = 1'–0"

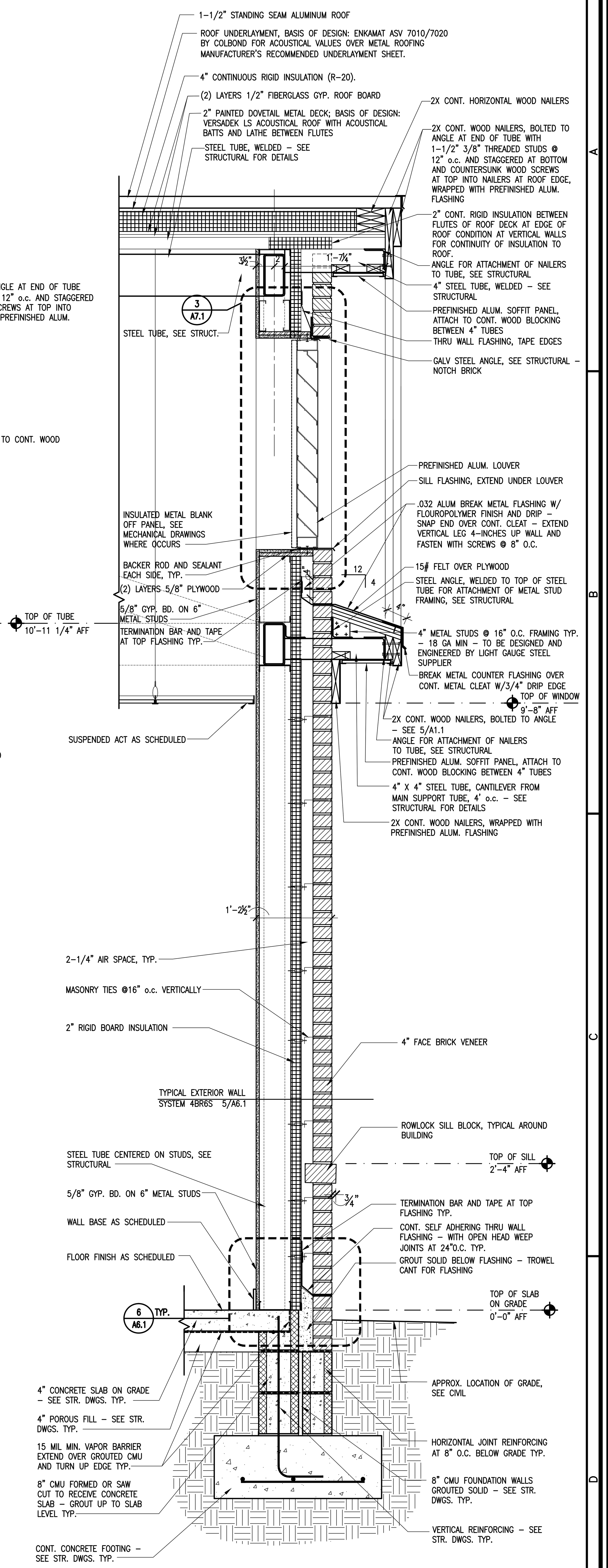

AT WEST WALL
1 TYPICAL WALL SECTION
A6.2 SCALE: 1" = 1'–0"

The Boudreaux Group
The Boudreaux Group, Inc.
1330 Lady St., Suite 500 (29201)
P.O. Box 5695
Columbia, SC 29250
803 799 0247 p
803 771 6844 f
info@boudreauxgroup.com
Interdisciplinary Design Architecture Interiors Planning

A/E Seal: STATE OF SOUTH CAROLINA — ROBERT RANDALL HUTH, COLUMBIA, SC — 5046 — 10-01-14 — REGISTERED ARCHITECT

A/E Seal: STATE OF SOUTH CAROLINA — The Boudreaux Group, Inc. — Columbia, South Carolina — B-77010 — REGISTERED ARCHITECTS

Project Title
UNIVERSITY OF SOUTH CAROLINA SCHOOL OF JOURNALISM BROADCAST STUDIO

BID DOCUMENTS

COLUMBIA, SOUTH CAROLINA

Revisions		
No.	Name	Date

Project No. U–646–12–3
Drawn By KGQ
Checked By RRH
Date 10.31.14

This drawing and the design thereon are the property of The Boudreaux Group, Inc. The reproduction, copying, or use of this drawing without the written consent of The Boudreaux Group, inc. is prohibited and any infringement will be subject to legal action. Copyright © 2001 The Boudreaux Group

Drawing Title
WALL SECTIONS

Drawing No.
A6.2

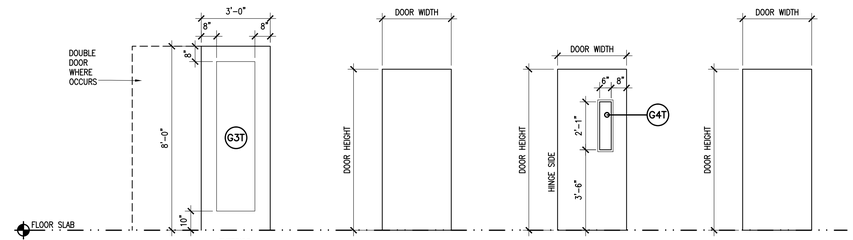

EXTERIOR
1-3/4" PREFINISHED CUSTOM STEEL SOUND DOOR WITH INSULATED GLASS - STC RATING OF 46 MIN. SEE SPECIFICATION 083473
D1

INTERIOR
1-3/4" SOLID CORE FLUSH WOOD DOOR, STAINED
D2

INTERIOR
1-3/4" SOLID CORE FLUSH WOOD DOOR, STAINED W/GLASS
D3

EXTERIOR
FLUSH 1-3/4" HOLLOW METAL DOOR INSULATED. FACTORY PRIMED - FIELD PAINTED
D4

ELEVATIONS
DOOR TYPE
SCALE: 3/8" = 1'-0"

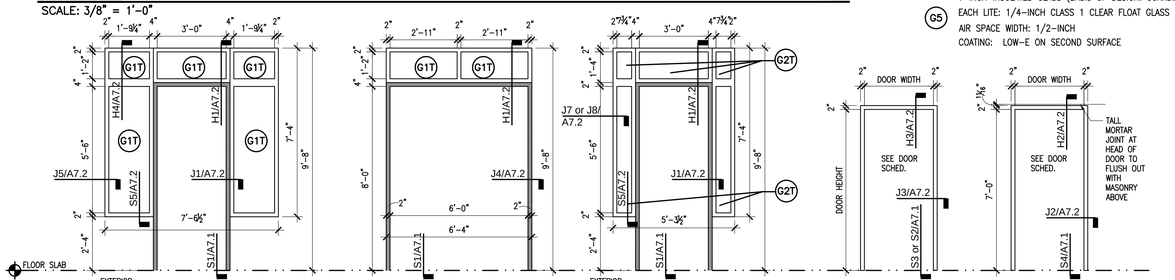

EXTERIOR
PREFINISHED ALUMINUM STOREFRONT WITH ALUM. STOREFRONT SUBFRAME AT SIDELITES AND TRANSOMS WITH HOLLOW METAL DOOR FRAME - SOUND ISOLATION RATING. DOOR FRAME HATCHED FOR CLARITY
F1

EXTERIOR
PREFINISHED ALUMINUM STOREFRONT WITH ALUM. STOREFRONT SUBFRAME AT TRANSOM WITH HOLLOW METAL DOOR FRAME - SOUND ISOLATION RATING. DOOR FRAME HATCHED FOR CLARITY
F2

EXTERIOR
PREFINISHED ALUMINUM STOREFRONT WITH ALUM. STOREFRONT SUBFRAME AT SIDELITES AND TRANSOMS WITH HOLLOW METAL DOOR FRAME - SOUND ISOLATION RATING. DOOR FRAME HATCHED FOR CLARITY
F3

INTERIOR
HOLLOW METAL FRAME FACTORY PRIMED - FIELD PAINTED
F4

EXTERIOR
HOLLOW METAL FRAME FACTORY PRIMED - FIELD PAINTED
F5

ELEVATIONS
FRAME TYPE
SCALE: 3/8" = 1'-0"

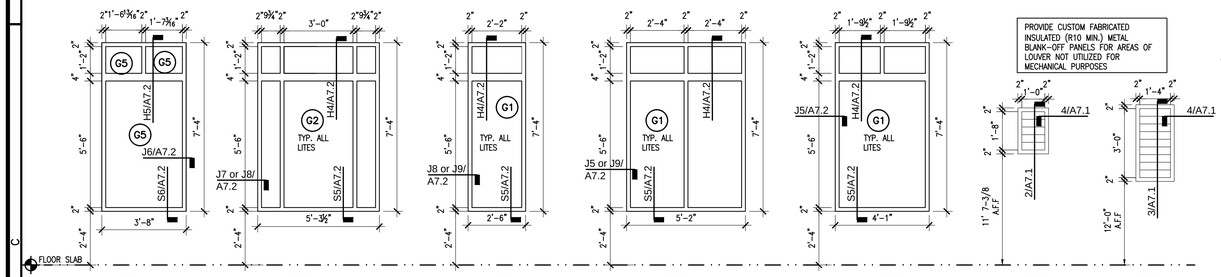

EXTERIOR
PREFINISHED ALUMINUM STOREFRONT WITH INSULATED GLASS
W1

EXTERIOR
PREFINISHED ALUMINUM STOREFRONT WITH INSULATED GLASS - SOUND ISOLATION RATING AND POLARIZED
W2

EXTERIOR
PREFINISHED ALUMINUM STOREFRONT WITH INSULATED GLASS - SOUND ISOLATION RATING AND POLARIZED
W3

EXTERIOR
PREFINISHED ALUMINUM STOREFRONT WITH INSULATED GLASS - SOUND ISOLATION RATING AND POLARIZED
W4

EXTERIOR
PREFINISHED ALUMINUM STOREFRONT WITH INSULATED GLASS - SOUND ISOLATION RATING AND POLARIZED
W5

EXTERIOR
HOLLOW METAL LOUVER FACTORY PRIMED - FIELD PAINTED
L1

EXTERIOR
HOLLOW METAL LOUVER FACTORY PRIMED - FIELD PAINTED
L2

PROVIDE CUSTOM FABRICATED INSULATED (R10 MIN.) METAL BLANK-OFF PANELS FOR AREAS OF LOUVER NOT UTILIZED FOR MECHANICAL PURPOSES

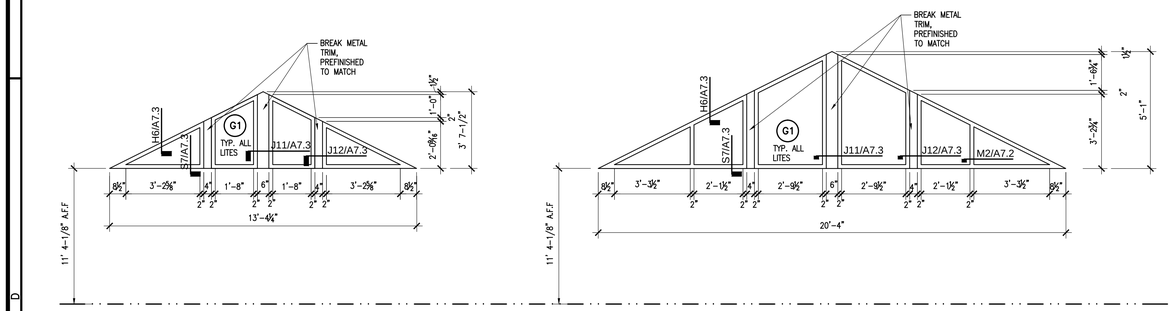

EXTERIOR
PREFINISHED ALUMINUM STOREFRONT WITH INSULATED GLASS - SOUND ISOLATION RATING
W6

EXTERIOR
PREFINISHED ALUMINUM STOREFRONT WITH INSULATED GLASS - SOUND ISOLATION RATING
W7

GENERAL CONSTRUCTION NOTE FOR ALUMINUM STOREFRONT:
WHERE SUBFRAME GLAZING OCCURS, PROVIDE 3/8" VENTILATION HOLES PREDRILLED AT FACTORY BASED ON DETAILS 6&7/A7.1. PROVIDE PLACEMENT OF HOLES ON SHOP DRAWINGS FOR APPROVAL.

ELEVATIONS
WINDOW TYPE
1 / A7.1 SCALE: 3/8" = 1'-0"

GLASS TYPES

1-INCH INSULATED GLASS (BASIS OF DESIGN: GUARDIAN SUNGUARD SUPERNEUTRAL 54 ON CLEAR WITH ROSCOVIEW POLARIZED SUBFRAME GLASS)

G1 — EACH LITE: 1/4-INCH CLASS 1 CLEAR FLOAT GLASS
AIR SPACE WIDTH: 1/2-INCH
COATING: LOW-E ON SECOND SURFACE
SUBFRAME GLASS: 8mm ACRYLIC ROSCOVIEW POLARIZING GLASS

G1T — SAME AS G1 EXCEPT ALL INSULATED GLASS TO BE FULLY TEMPERED

1-INCH INSULATED GLASS (BASIS OF DESIGN: GUARDIAN SUNGUARD SUPERNEUTRAL 54 ON CLEAR WITH 1/4" TEMPERED CLEAR SUBFRAME GLASS)

G2 — EACH LITE: 1/4-INCH CLASS 1 CLEAR FLOAT GLASS
AIR SPACE WIDTH: 1/2-INCH
COATING: LOW-E ON SECOND SURFACE
SUBFRAME GLASS: 1/4" TEMPERED GLASS WITH SURFACE APPLIED CINEGEL 3402 N.3 FILM BY ROSCO

G2T — SAME AS G2 EXCEPT ALL INSULATED GLASS TO BE FULLY TEMPERED

1 1/2-INCH EXTERIOR LAMINATED SOUND GLASS (BASIS OF DESIGN: ACOUSTIPANE)

G3T — EACH LITE: 3/4-INCH ACOUSTIPANE 48 AND 1/4-INCH ACOUSTIPANE 36 WITH 1/2-INCH AIR SPACE WIDTH AND SURFACE APPLIED CINEGEL 3402 N.3 FILM BY ROSCO

G4T — 3/8" TEMPERED GLASS

1-INCH INSULATED GLASS (BASIS OF DESIGN: GUARDIAN SUNGUARD SUPERNEUTRAL 54 ON CLEAR)

G5 — EACH LITE: 1/4-INCH CLASS 1 CLEAR FLOAT GLASS
AIR SPACE WIDTH: 1/2-INCH
COATING: LOW-E ON SECOND SURFACE

FIRST FLOOR DOOR AND FRAME SCHEDULE

	DOOR			FRAME						
DOOR NO.	WIDTH	HEIGHT	TYPE	TYPE	HEAD	JAMB	SILL	RATING	HDWR *1	REMARKS
100A	3'-0"	8'-0"	D1	F1	H1	J1	S1	--	1	2,4
100B	PR 3'-0"	8'-0"	D1	F2	H1	J4	S1	--	2	2,4
100C	3'-0"	8'-0"	D1	F1	H1	J1	S1	--	1	2,4
101A	3'-0"	7'-0"	D3	F4	H3	J3	S2	--	5	3
102A	3'-0"	7'-0"	D2	F4	H3	J3	S3	--	6	3
103A	3'-0"	7'-0"	D2	F4	H3	J3	S3	--	7	2
104A	3'-0"	7'-0"	D2	F4	H3	J3	S3	--	8	--
H101A	3'-0"	8'-0"	D1	F3	H1	J1	S1	--	3	2,4
X101A	3'-6"	7'-0"	D4	F5	H2	J2	S4	--	4	2

GENERAL NOTES:

1. SEE SPECIFICATION SECTION 087100 "DOOR HARDWARE" FOR HARDWARE SET NUMBERS AND DETAILS.
2. COORDINATE WITH ELECTRICAL DRAWINGS FOR CARD READER ACCESS AND SECURITY CONTROLS FOR DOOR.
3. PROVIDE DOOR GASKETS ON LEAF, HEAD, DOOR JAMB, AND BOTTOM AT DOORS INDICATED FOR ACOUSTICAL SEPARATION. AT DOOR BOTTOM, GASKET MUST SEAL TO A HARD, NON-CARPET SURFACE. CONTRACTOR TO STOP CARPET PRIOR TO GASKET.
4. PREFINISHED CUSTOM STEEL SOUND DOOR WITH INSULATED GLASS: BASIS OF DESIGN - OVERLY DOOR COMPANY, MODEL 4695163 CUSTOM SOUND DOOR ASSEMBLY WITH MIN. 46 STC SOUND RATING, CUSTOMIZED FOR EXTERIOR APPLICATION, SIZES, GLAZING, AND ATTACHMENT TO ALUMINUM STOREFRONT - PREFINISHED BONE WHITE TO MATCH STOREFRONT - SEE HARDWARE SCHEDULE AND SPECIFICATIONS FOR DETAILS. CONTRACTOR TO SEAL COMPLETELY AROUND ELECTRONIC HARDWARE (DPS AND POWER TRANSFER) AFTER APPLICATION IS COMPLETE TO PREVENT WATER INFILTRATION AT THE FRAME.

5 / A7.1 DOOR SCHEDULE
SCALE: 3/8" = 1'-0"

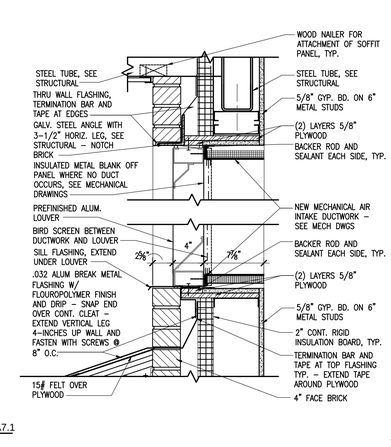

2 / A7.1 LOUVER HEAD/SILL DETAIL
SCALE: 1 1/2" = 1'-0"

3 / A7.1 LOUVER HEAD/SILL DETAIL
SCALE: 1 1/2" = 1'-0"

4 / A7.1 LOUVER JAMB DETAIL
SCALE: 1 1/2" = 1'-0"

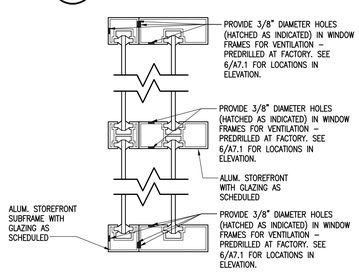

@SUBFRAME GLASS
7 / A7.1 VENTILATION DETAIL - SECTION
SCALE: 3/8" = 1'-0"

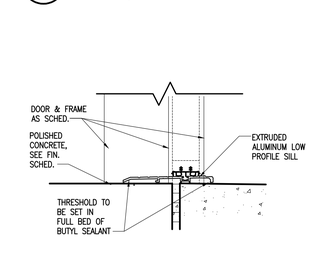

S1 / A7.2 SILL DETAIL
SCALE: 3" = 1'-0"

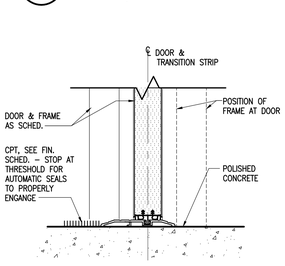

S2 / A7.2 SILL DETAIL
SCALE: 3" = 1'-0"

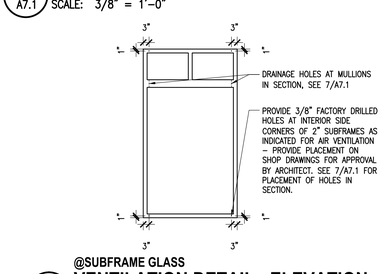

@SUBFRAME GLASS
6 / A7.1 VENTILATION DETAIL - ELEVATION
SCALE: 3/8" = 1'-0"

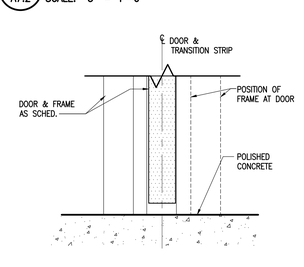

S3 / A7.2 SILL DETAIL
SCALE: 3" = 1'-0"

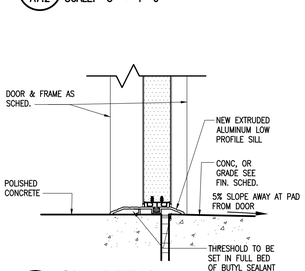

S4 / A7.2 SILL DETAIL
SCALE: 3" = 1'-0"

The Boudreaux Group
The Boudreaux Group, Inc.
1330 Lady St., Suite 500 (29201)
P.O. Box 5905
Columbia, SC 29250
803 799 0247 P
803 771 6844 F
info@theboudreauxgroup.com
Interdisciplinary Design Architecture Interiors Planning

STATE OF SOUTH CAROLINA — ROBERT C. DEBLOIS, JR. — 5046 — 10-01-14 — REGISTERED ARCHITECT — A/E Seal

STATE OF SOUTH CAROLINA — The Boudreaux Group, Inc. — Columbia, South Carolina — B-77010 — REGISTERED ARCHITECTS — A/E Seal

Project Title
UNIVERSITY OF SOUTH CAROLINA
SCHOOL OF JOURNALISM
BROADCAST STUDIO

BID DOCUMENTS
COLUMBIA, SOUTH CAROLINA

Project No. 1303
Drawn By KGQ
Checked By CAB
Date 10.11.14

The drawing and the design thereon are the property of The Boudreaux Group. Any reproduction, transfer, or other use of this drawing without the written consent of The Boudreaux Group is prohibited and all rights are reserved by The Boudreaux Group.

Revisions
No. Name Date

Drawing Title
DOOR SCHEDULE, FRAMES & TYPES, WINDOW FRAMES

Drawing No.
A7.1

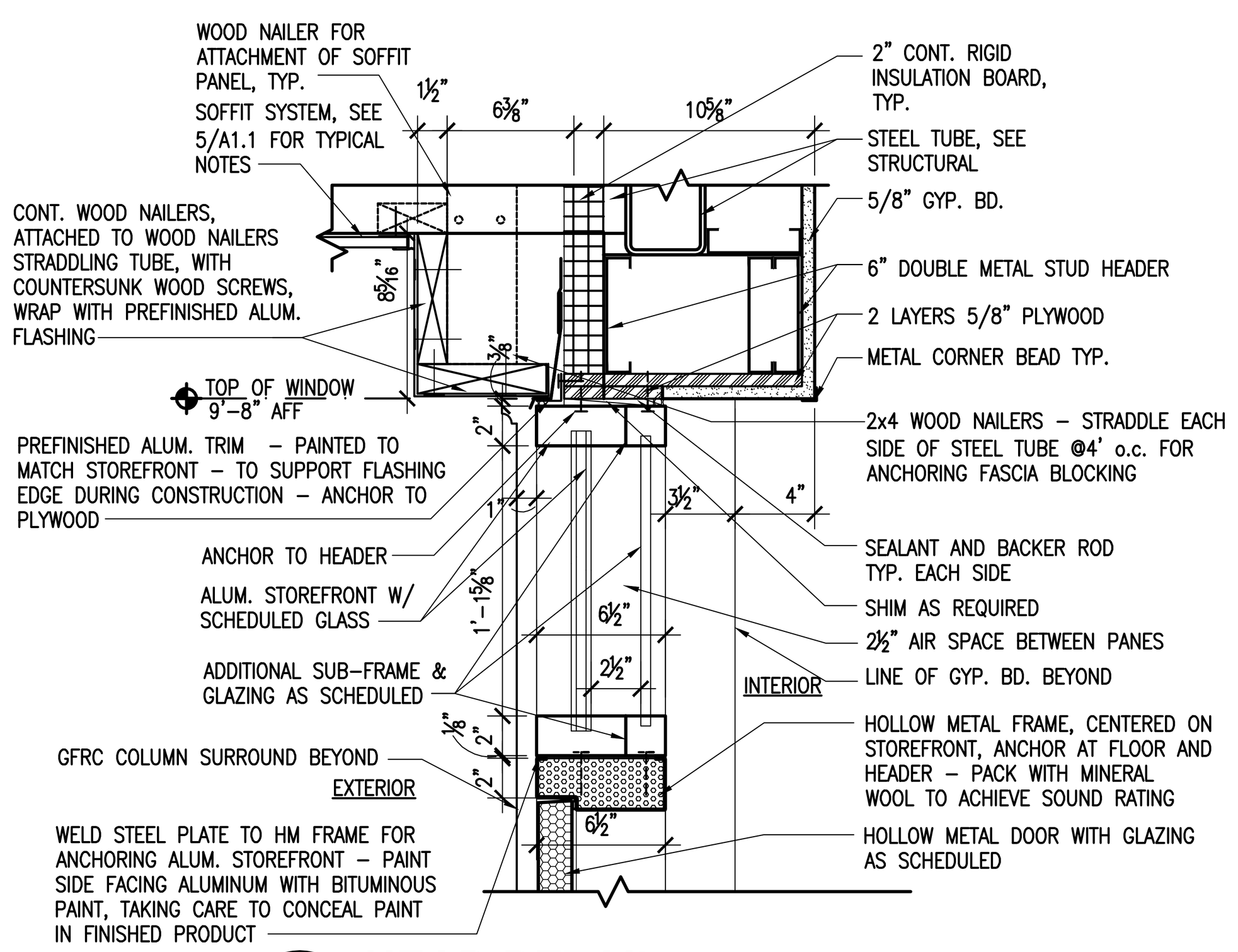

H1 HEAD DETAIL
A7.2 SCALE: 1 1/2" = 1'–0"

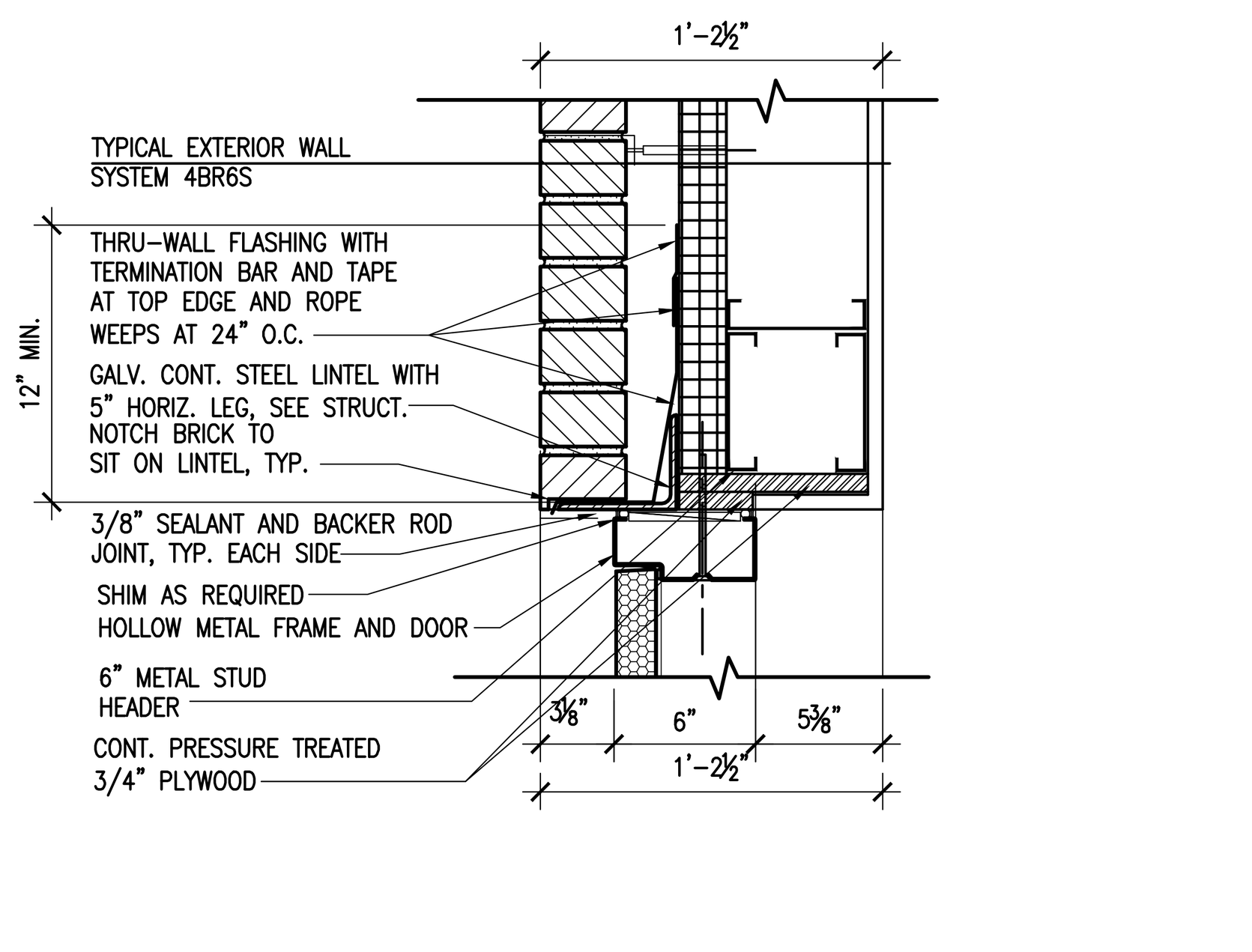

H2 HEAD DETAIL
A7.2 SCALE: 1 1/2" = 1'–0"

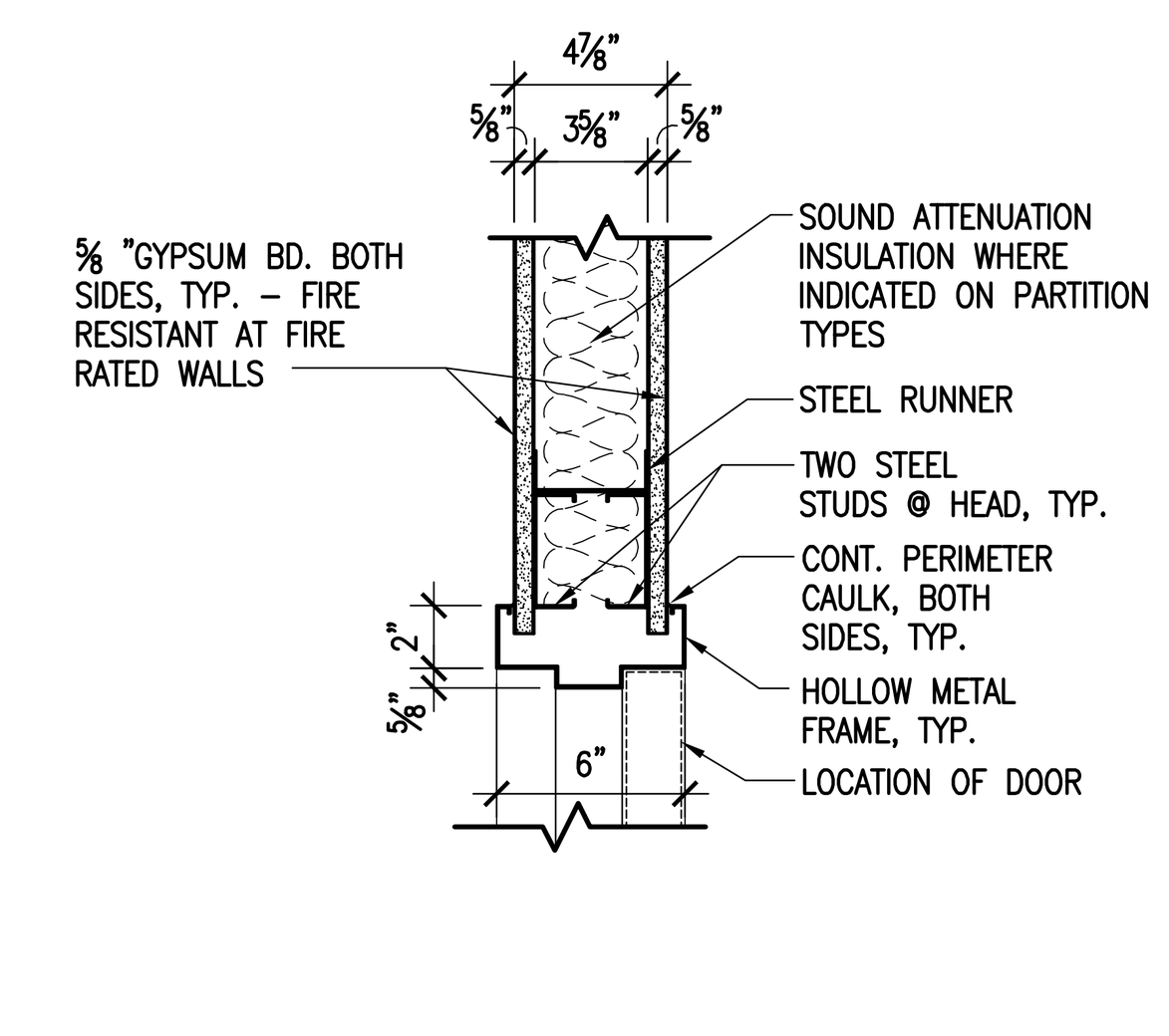

H3 HEAD DETAIL
A7.2 SCALE: 1 1/2" = 1'–0"

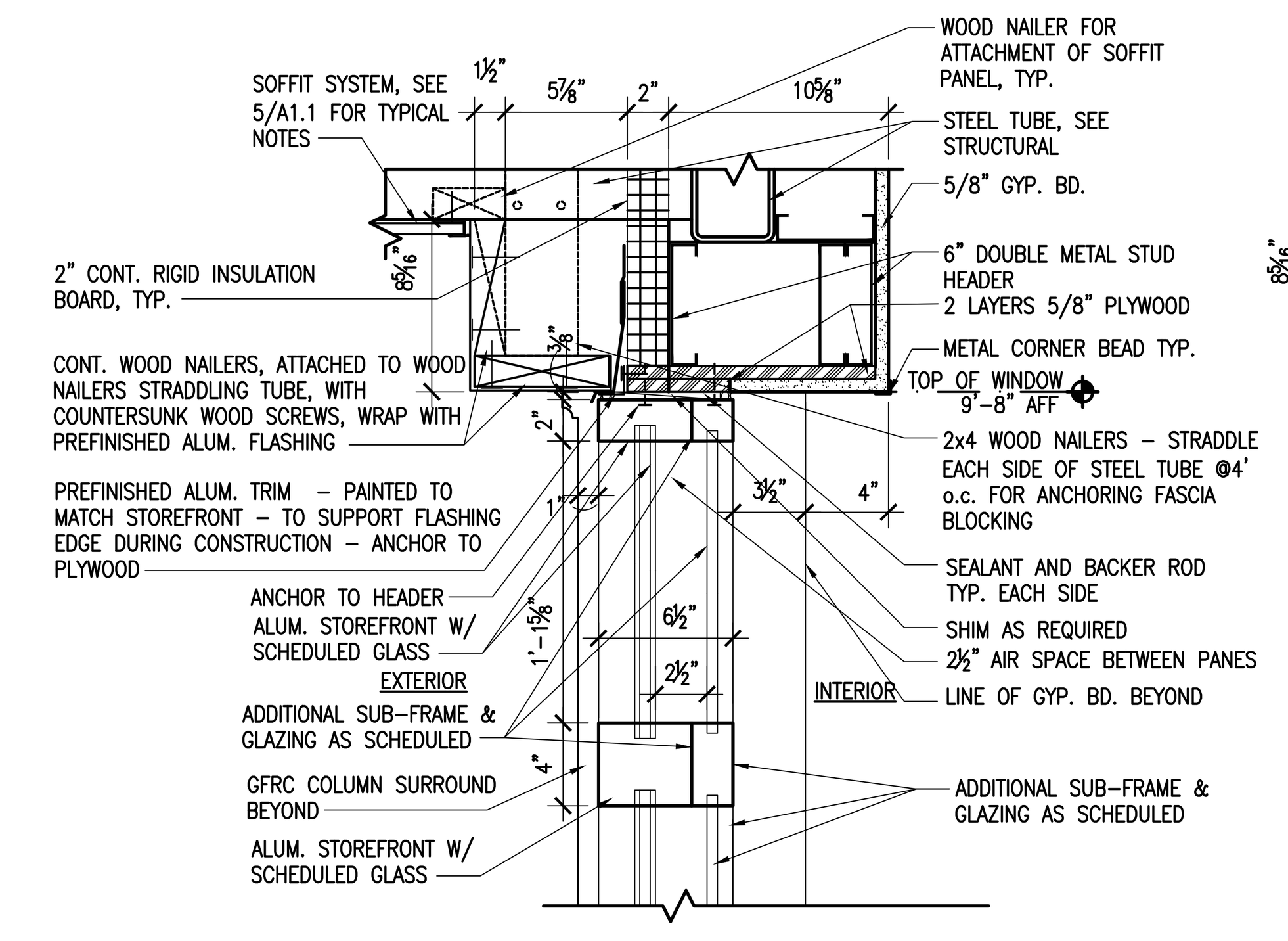

H4 HEAD DETAIL
A7.2 SCALE: 1 1/2" = 1'–0"

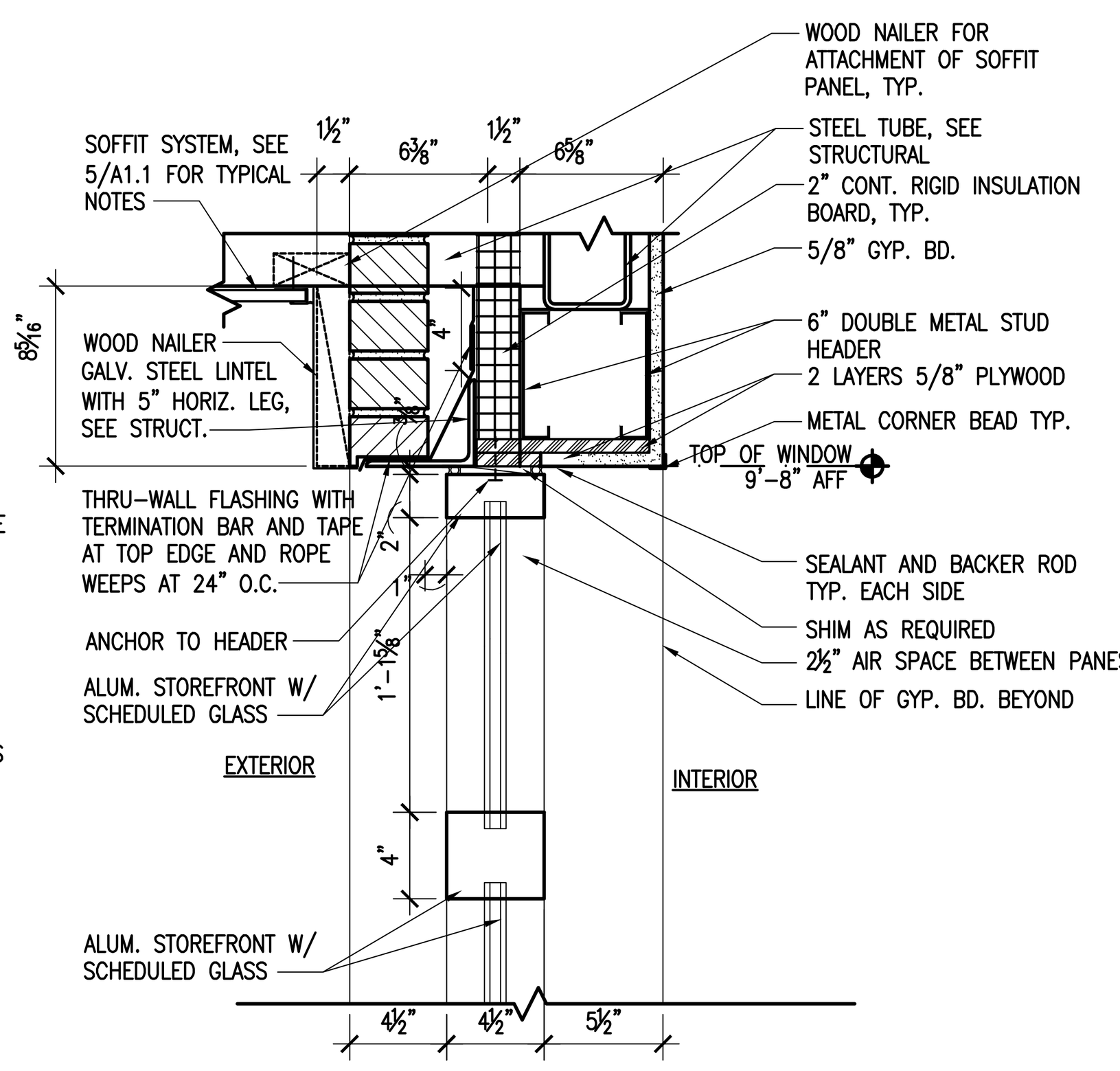

H5 HEAD DETAIL
A7.2 SCALE: 1 1/2" = 1'–0"

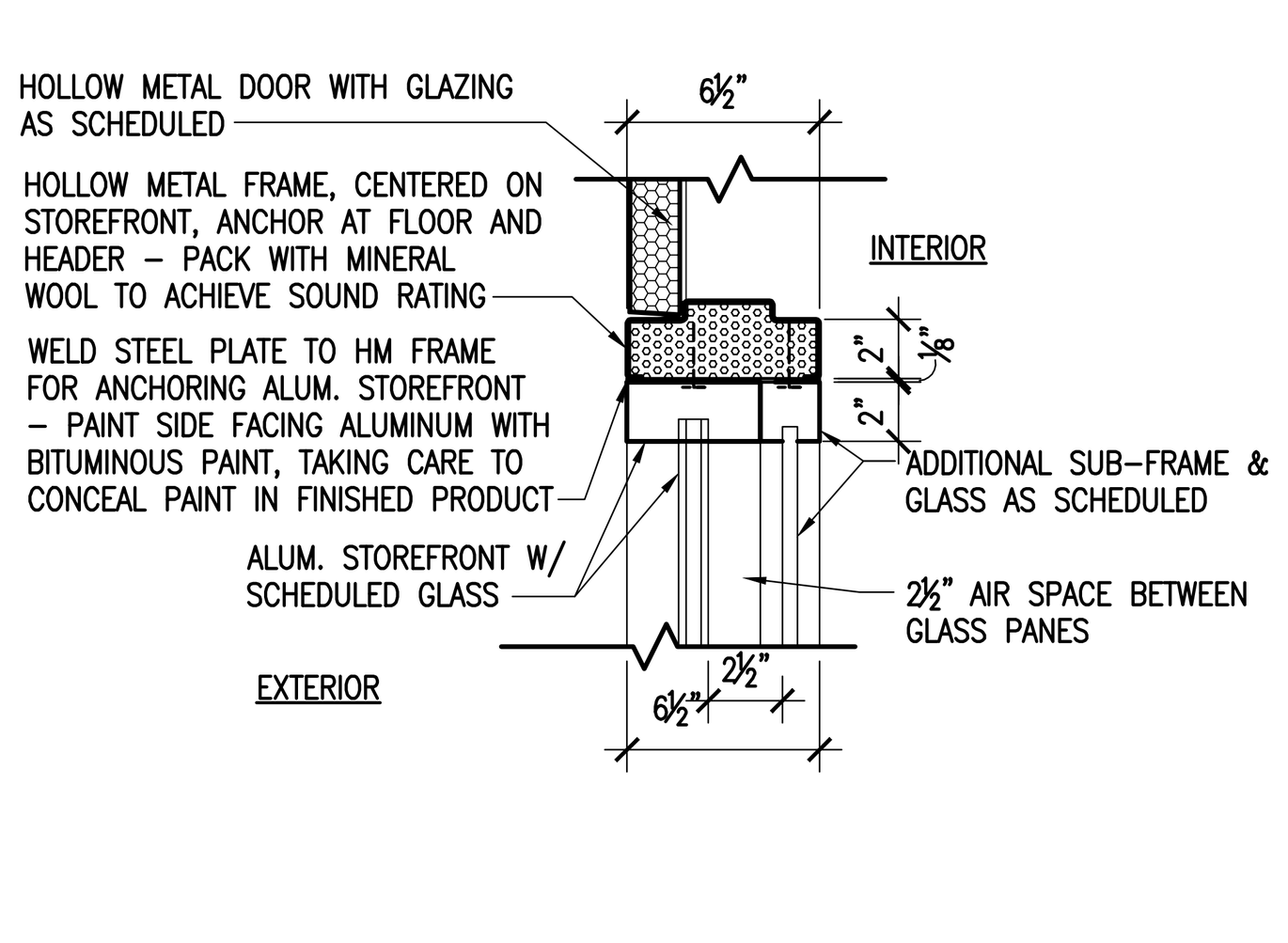

J1 JAMB DETAIL
A7.2 SCALE: 1 1/2" = 1'–0"

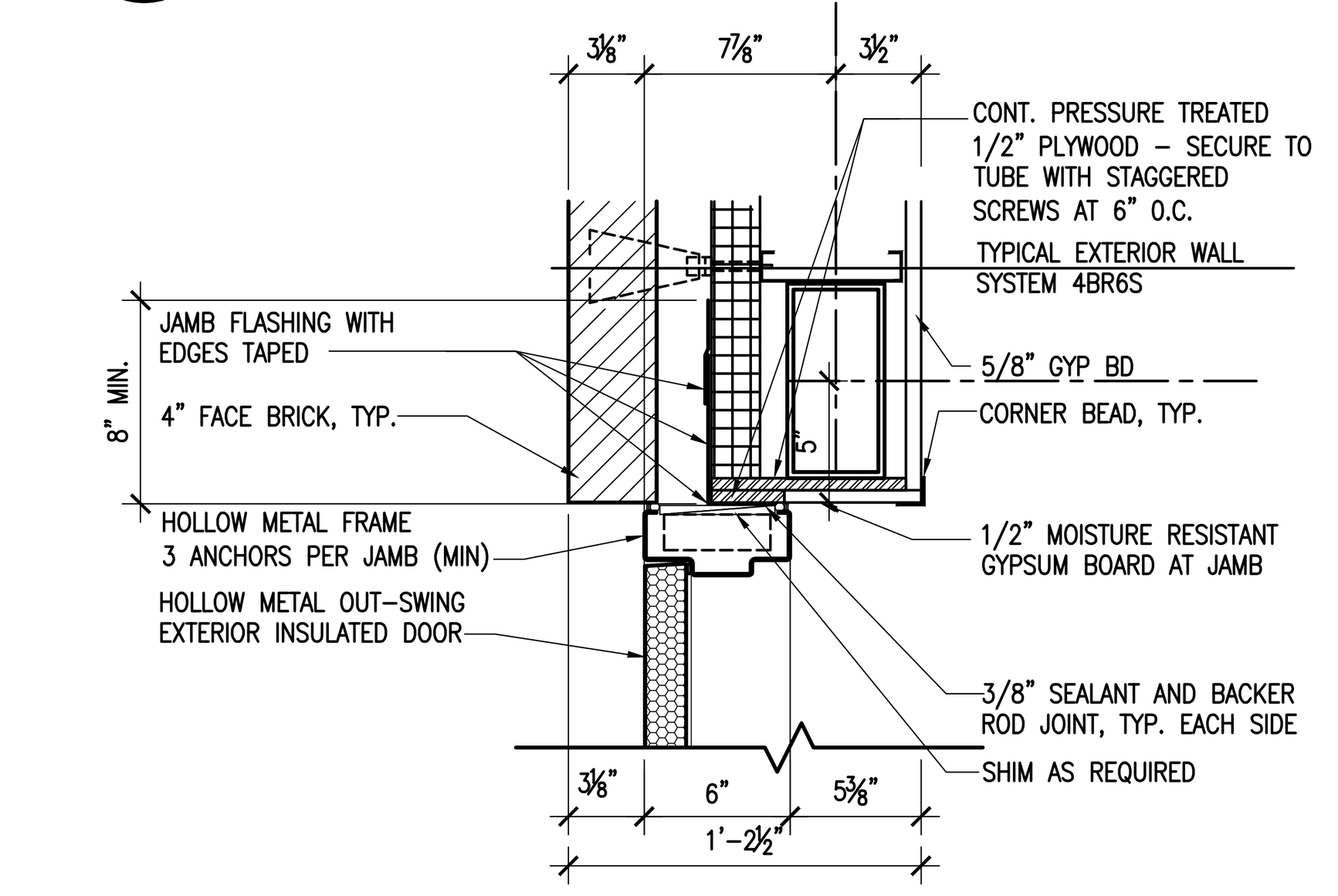

J2 JAMB DETAIL
A7.2 SCALE: 1 1/2" = 1'–0"

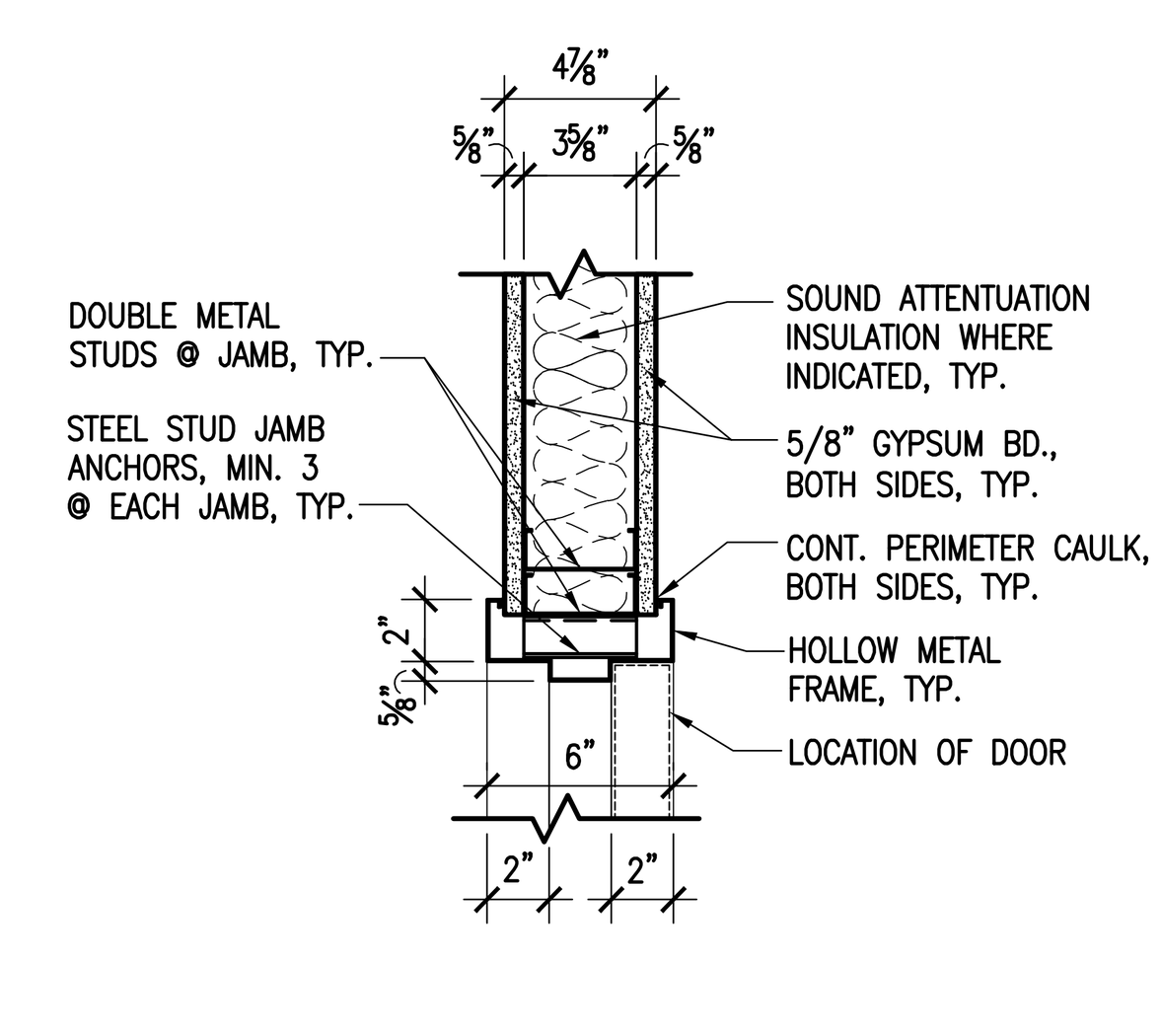

J3 JAMB DETAIL
A7.2 SCALE: 1 1/2" = 1'–0"

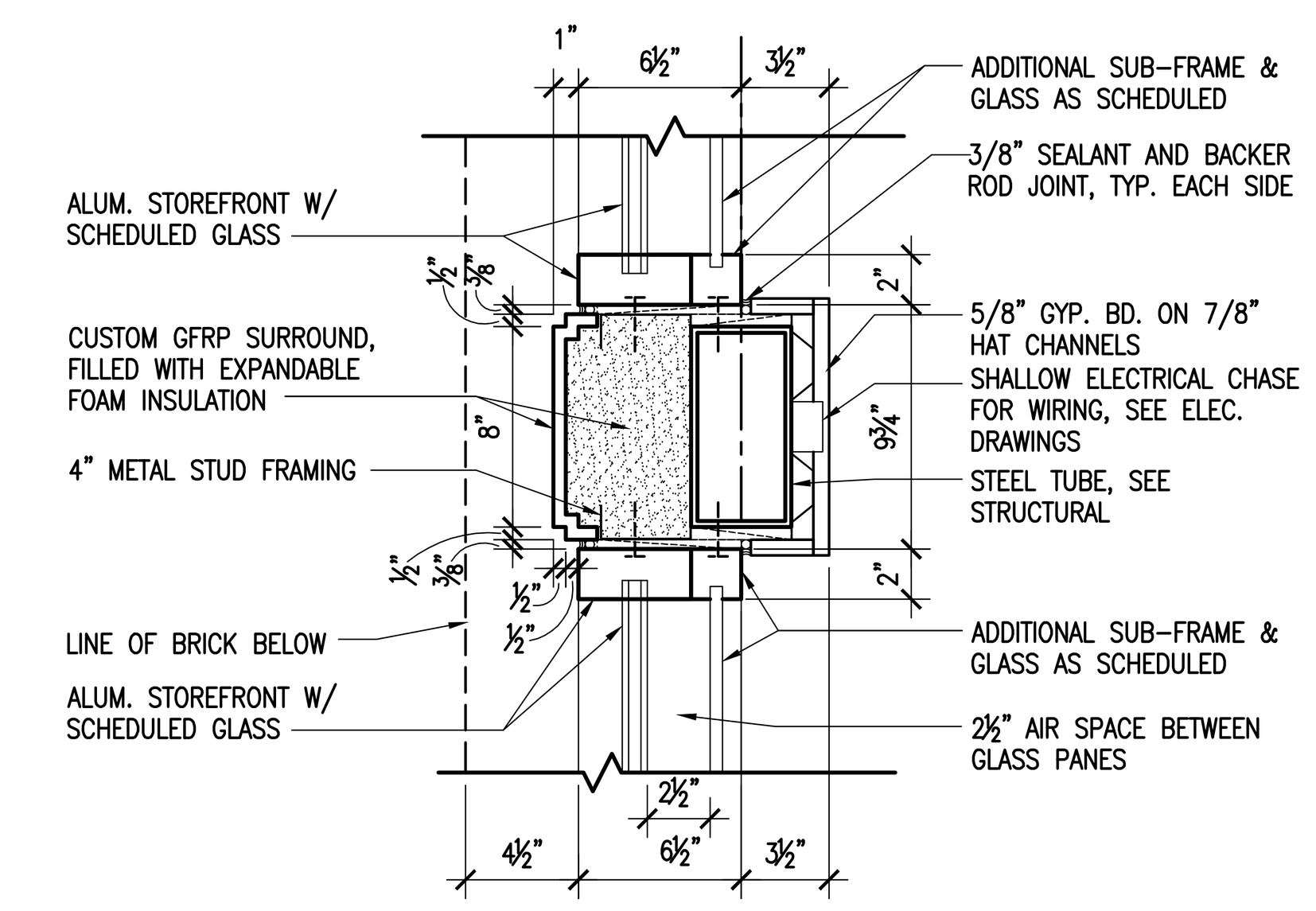

J5 JAMB DETAIL
A7.2 SCALE: 1 1/2" = 1'–0"

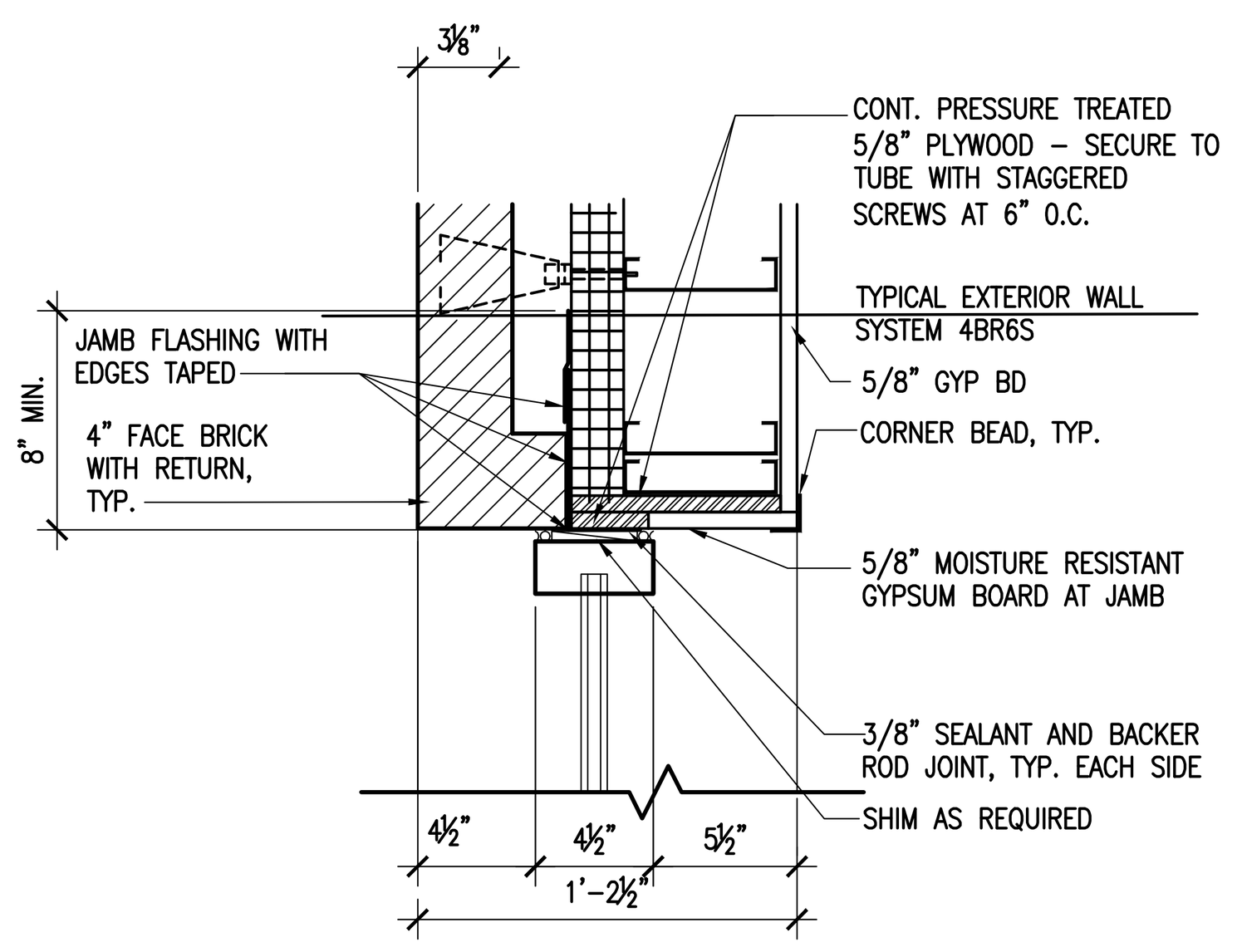

J6 JAMB DETAIL
A7.2 SCALE: 1 1/2" = 1'–0"

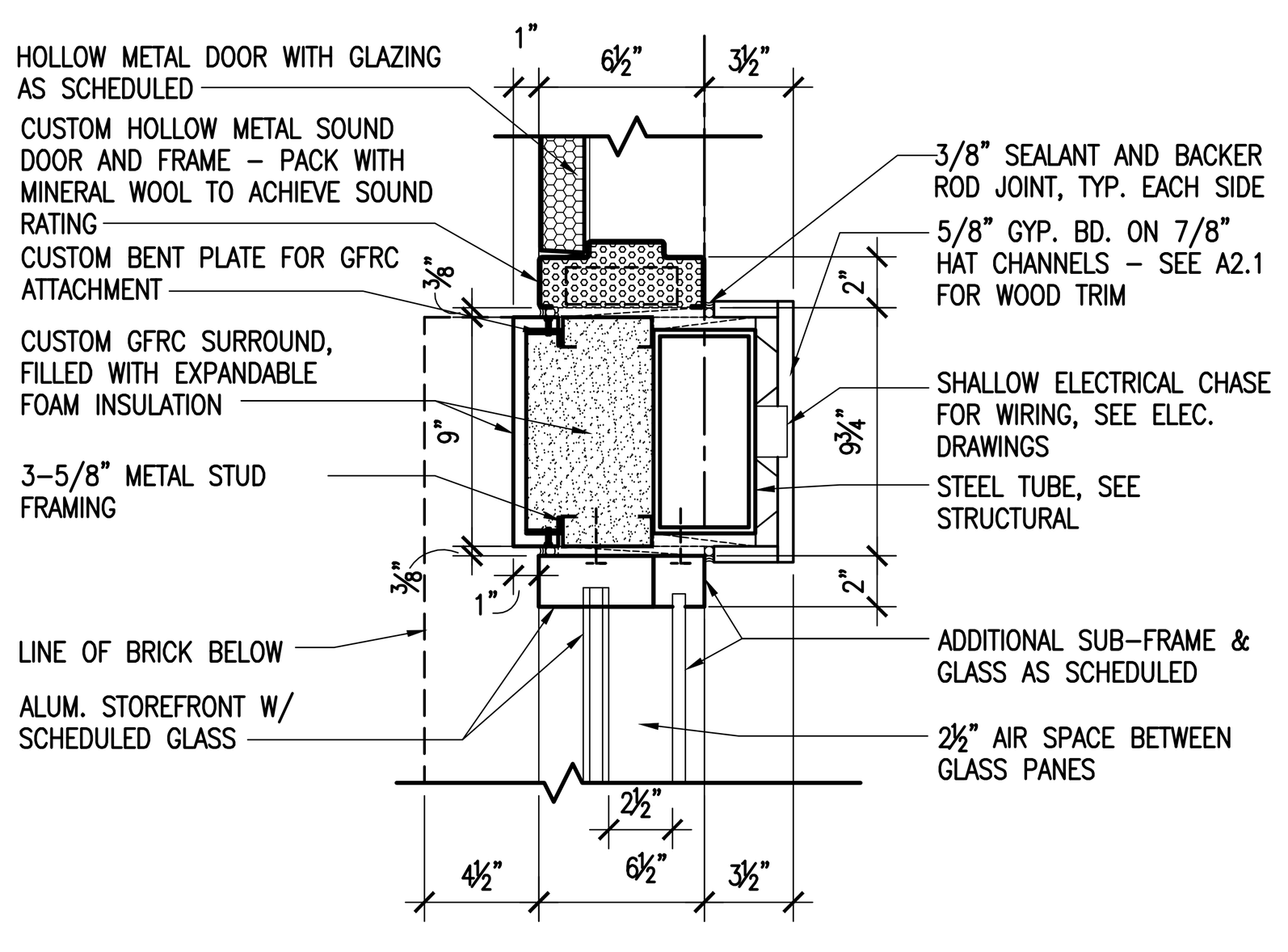

J4 JAMB DETAIL
A7.2 SCALE: 1 1/2" = 1'–0"

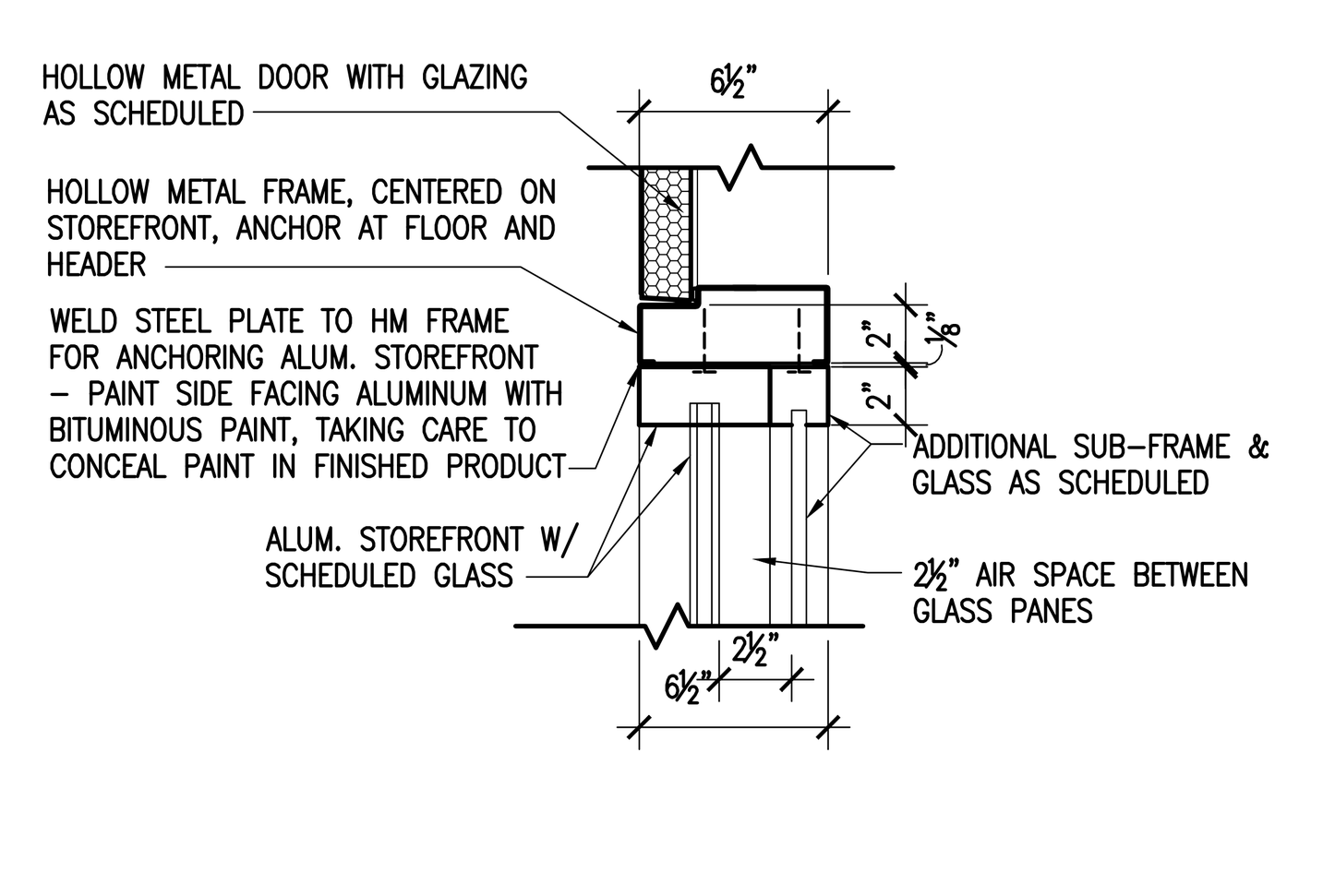

M1 MULLION DETAIL
A7.2 SCALE: 1 1/2" = 1'–0"

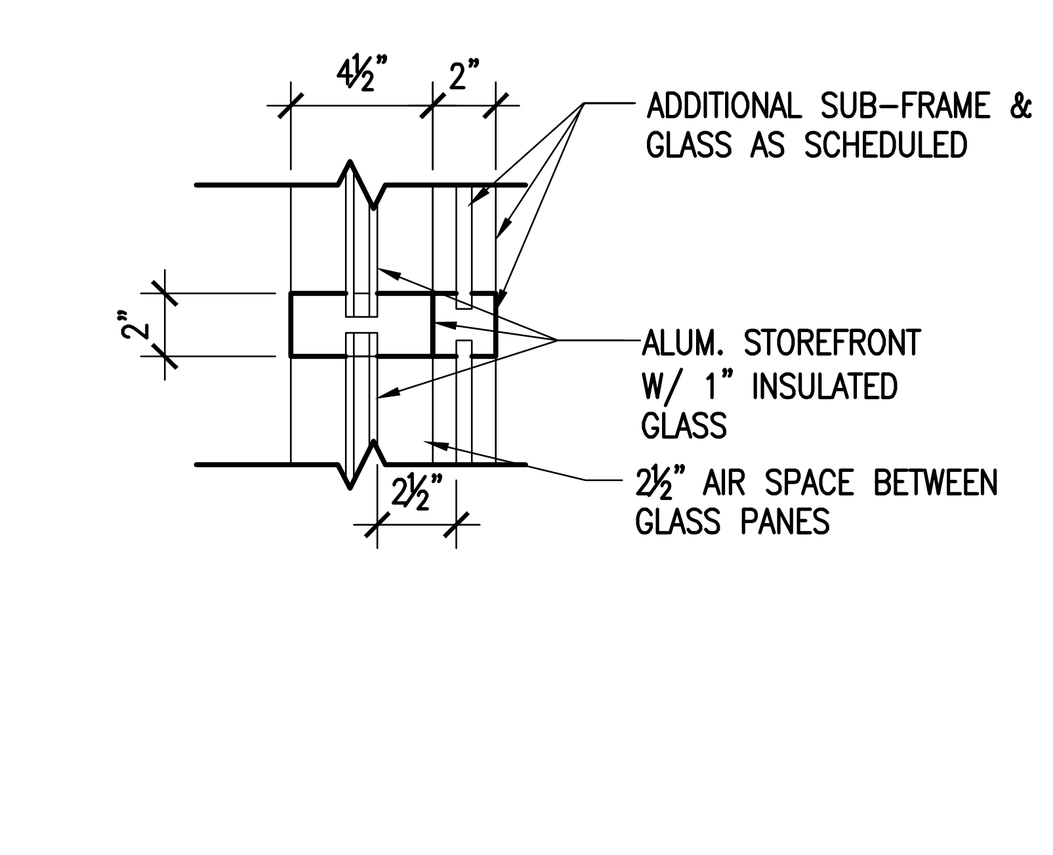

M2 MULLION DETAIL
A7.2 SCALE: 1 1/2" = 1'–0"

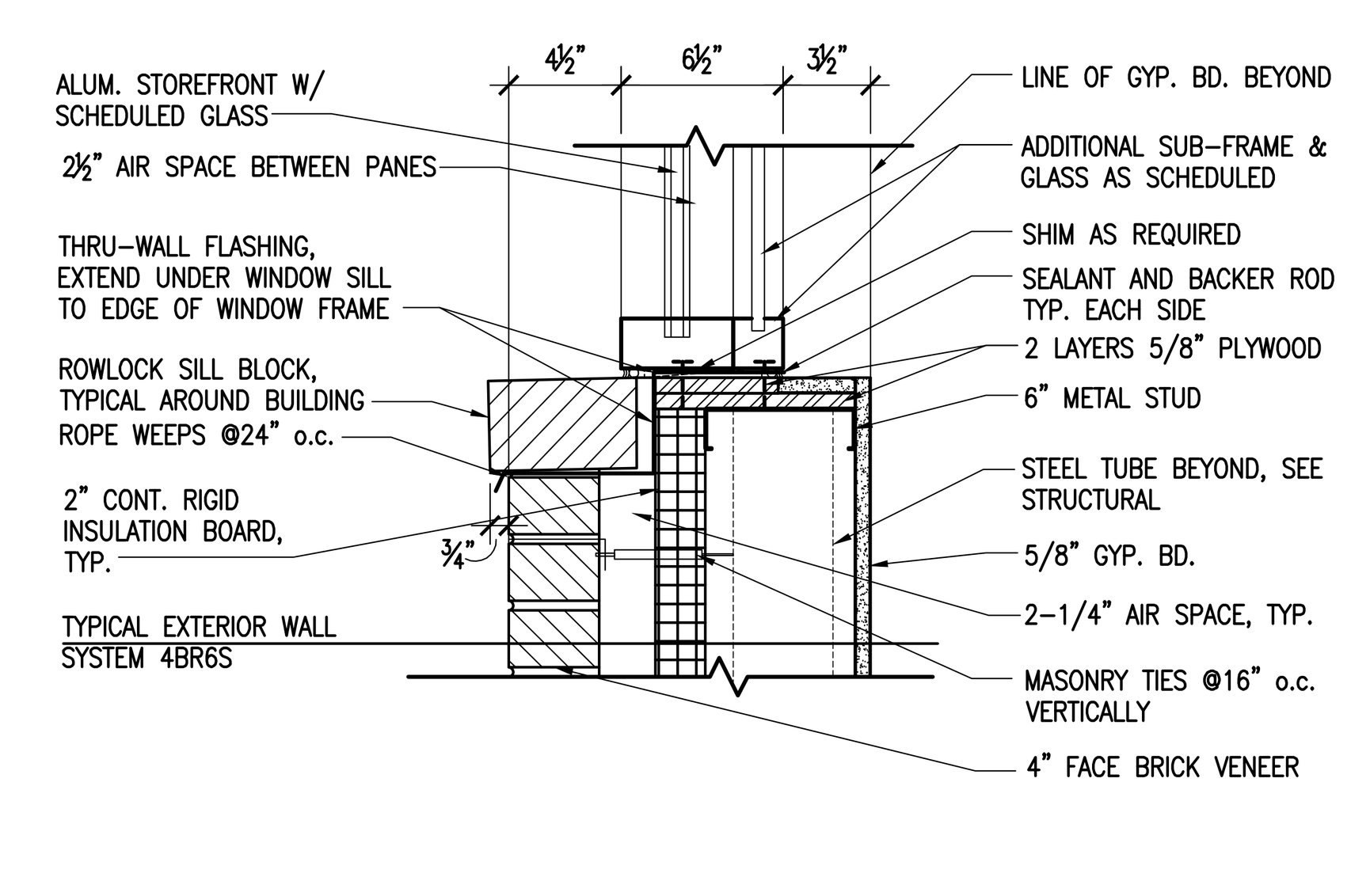

S5 SILL DETAIL
A7.2 SCALE: 1 1/2" = 1'–0"

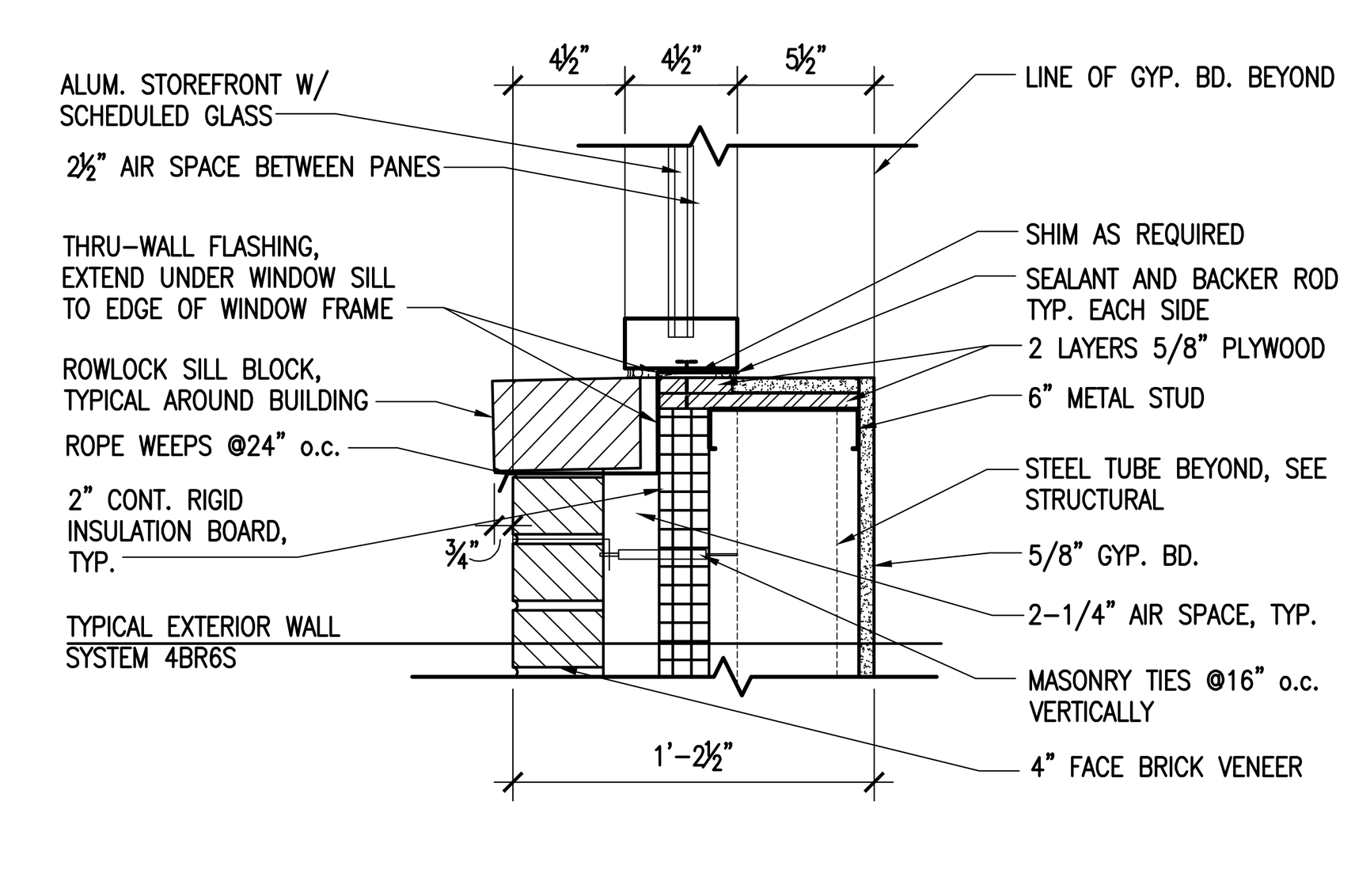

S6 SILL DETAIL
A7.2 SCALE: 1 1/2" = 1'–0"

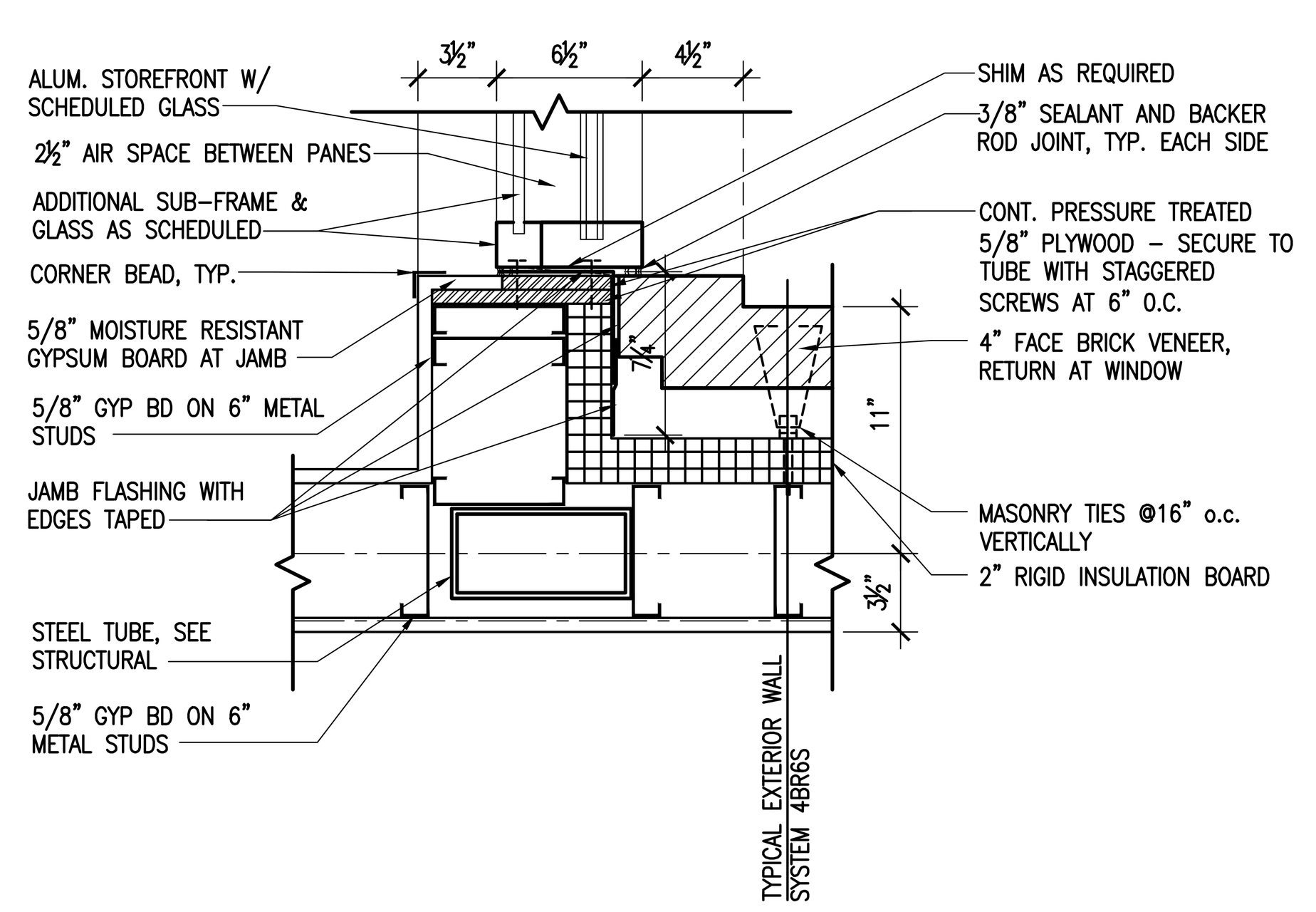

J7 JAMB DETAIL
A7.2 SCALE: 1 1/2" = 1'–0"

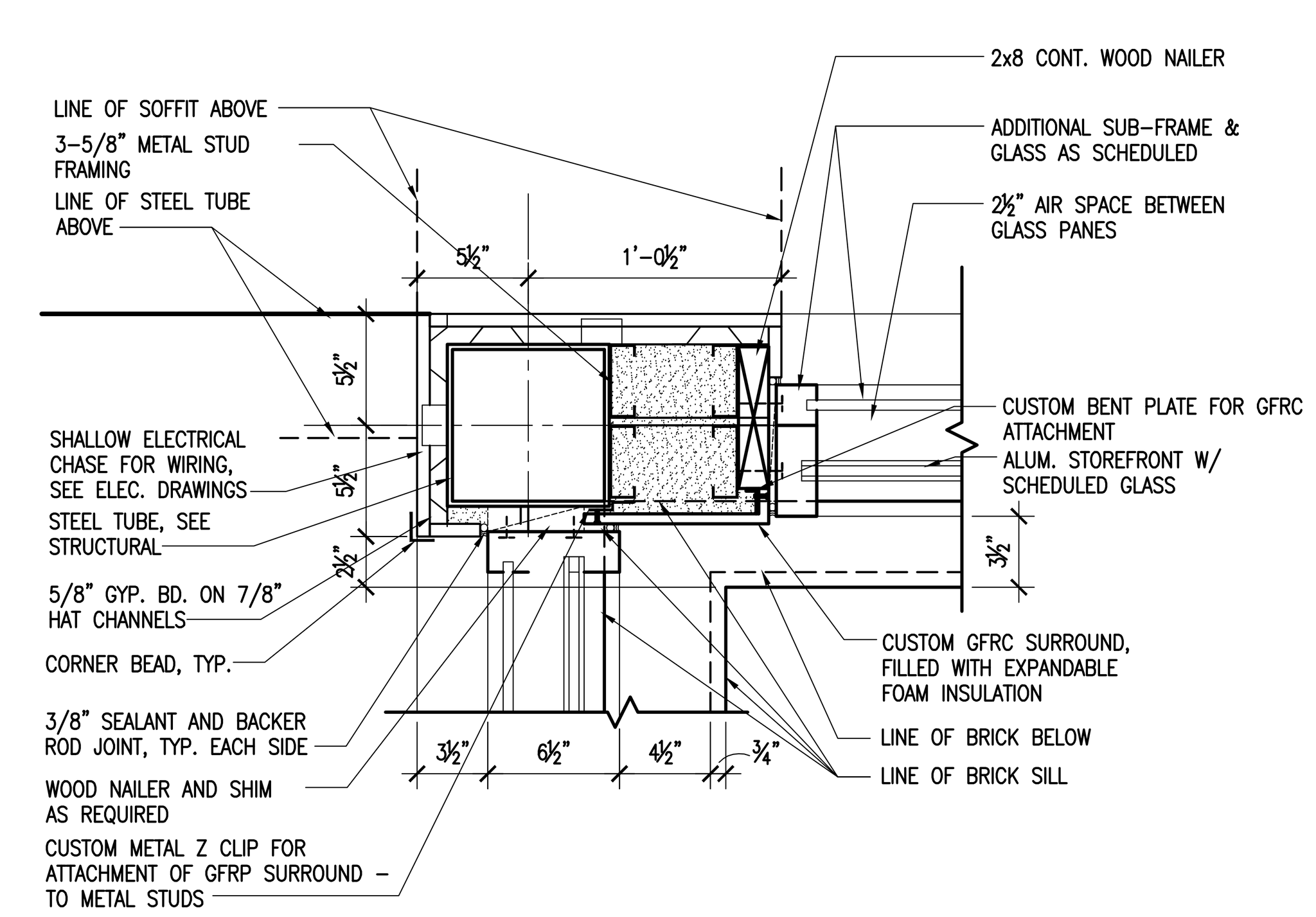

J8 JAMB DETAIL
A7.2 SCALE: 1 1/2" = 1'–0"

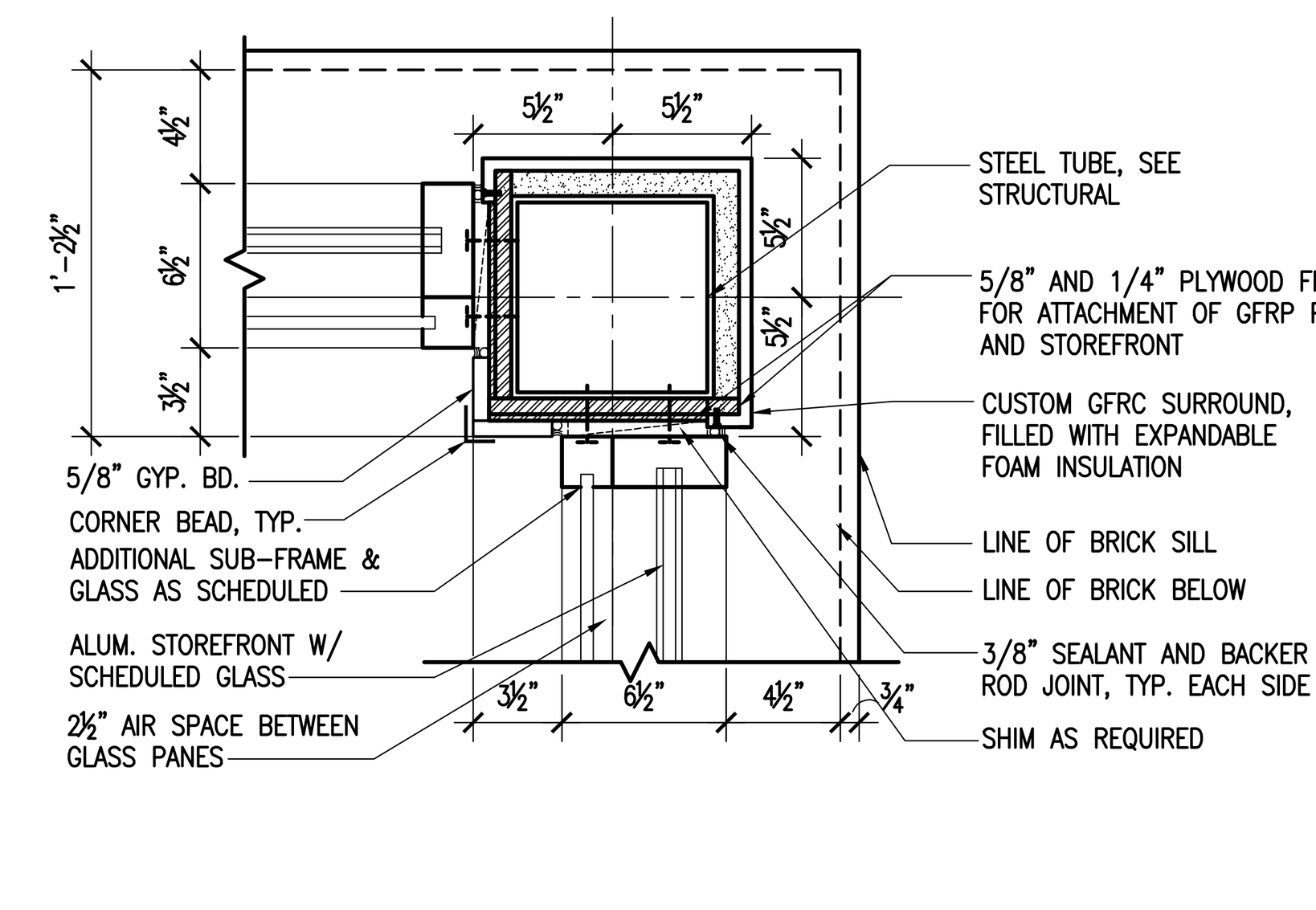

J9 JAMB DETAIL
A7.2 SCALE: 1 1/2" = 1'–0"

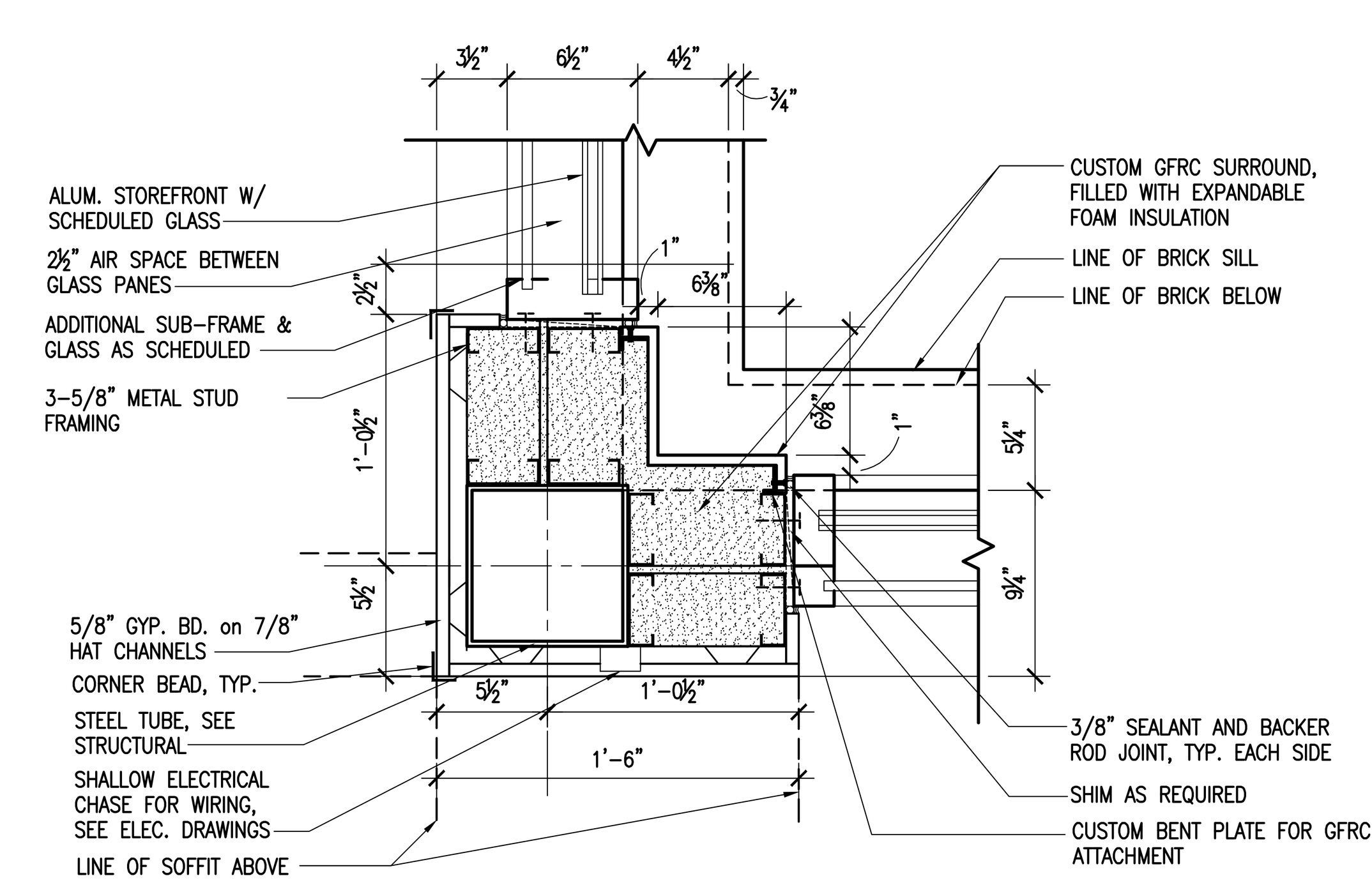

J10 JAMB DETAIL
A7.2 SCALE: 1 1/2" = 1'–0"

The Boudreaux Group
The Boudreaux Group, Inc.
1330 Lady St., Suite 500 (29201)
P.O. Box 5695
Columbia, SC 29250
803 799 0247 p
803 771 6844 f
info@boudreauxgroup.com
Interdisciplinary Design Architecture Interiors Planning

A/E Seal: STATE OF SOUTH CAROLINA ROBERT RANDALL HUTT COLUMBIA, SC 5046 10-01-14 REGISTERED ARCHITECT

A/E Seal: STATE OF SOUTH CAROLINA The Boudreaux Group, Inc. Columbia, South Carolina B-77010 REGISTERED ARCHITECTS

Project Title
UNIVERSITY OF SOUTH CAROLINA SCHOOL OF JOURNALISM BROADCAST STUDIO

BID DOCUMENTS
COLUMBIA, SOUTH CAROLINA

Project No.	Drawn By	Checked By	Date
U–646–12–3	KGQ	CAB	10.31.14

This drawing and the design thereon are the property of The Boudreaux Group, Inc. The reproduction, copying, or use of this drawing without the written consent of The Boudreaux Group, Inc. is prohibited and any infringement will be subject to legal action. Copyright © 2001 The Boudreaux Group

Revisions No.	Name	Date

Drawing Title
DOOR AND WINDOW DETAILS

Drawing No.
A7.2

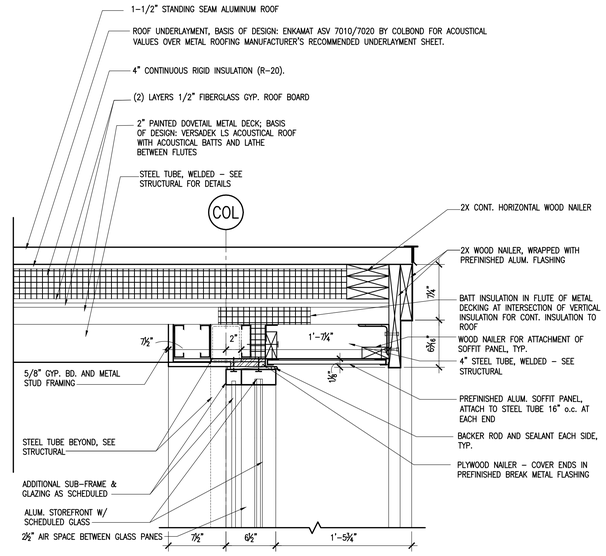

H6 HEAD DETAIL
A7.3 SCALE: 1 1/2" = 1'-0"

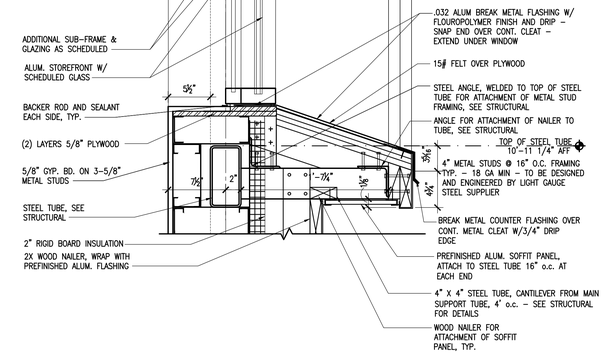

S7 SILL DETAIL
A7.3 SCALE: 1 1/2" = 1'-0"

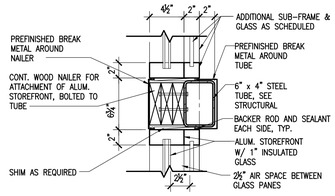

J11 JAMB DETAIL
A7.3 SCALE: 1 1/2" = 1'-0"

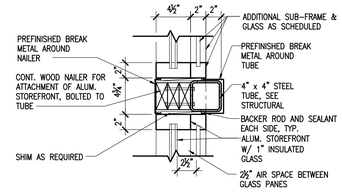

J12 JAMB DETAIL
A7.3 SCALE: 1 1/2" = 1'-0"

The Boudreaux Group
The Boudreaux Group, Inc.
1330 Lady St., Suite 300 (29201)
P.O. Box 5905
Columbia, SC 29250
803 799 0227 P
803 771 6844 F
info@theboudreauxgroup.com
Interdisciplinary Design Architecture Interiors Planning

A/E Seal
STATE OF SOUTH CAROLINA
ROBERT C. BOUDREAUX
5046
10-01-14
REGISTERED ARCHITECT

A/E Seal
STATE OF SOUTH CAROLINA
The Boudreaux Group, Inc.
Columbia, South Carolina
B-7701O
REGISTERED ARCHITECTS

Project Title
UNIVERSITY OF SOUTH CAROLINA
SCHOOL OF JOURNALISM
BROADCAST STUDIO
BID DOCUMENTS
COLUMBIA, SOUTH CAROLINA

Project No.
Issued 12-3

Drawn By
KOO

Checked By
CAB

Date
10.31.14

This drawing and the design thereon constitute the property of the Boudreaux Group. Any reproduction, copying, or other use of this drawing without the written consent of The Boudreaux Group is prohibited. All rights reserved. Unauthorized use is subject to legal action by The Boudreaux Group.

Revisions

No.	Name	Date

Drawing Title
WINDOW DETAILS

Drawing No.
A7.3

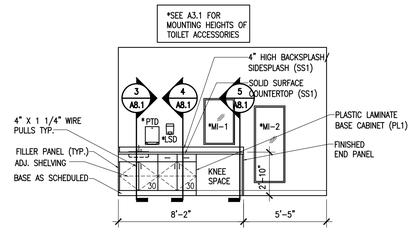

@OFFICE/GREEN ROOM 101

2 A81 CASEWORK ELEVATION

SCALE: 1/4" = 1'-0"

GENERAL NOTE: ALIGN JOINT BETWEEN DRAWER FACE AND BASE CABINET DOORS W/ADJACENT CASEWORK MODULES

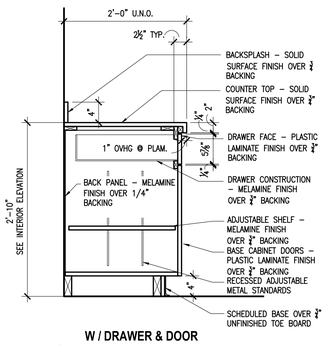

W / DRAWER & DOOR

3 A8.1 BASE CABINET

SCALE: 1" = 1'-0"

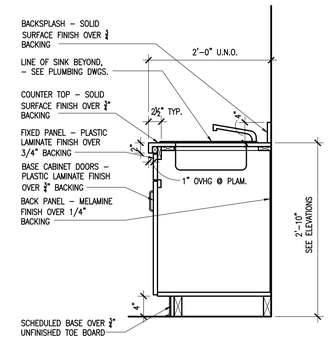

AT SINK

4 A8.1 BASE CABINET

SCALE: 1" = 1'-0"

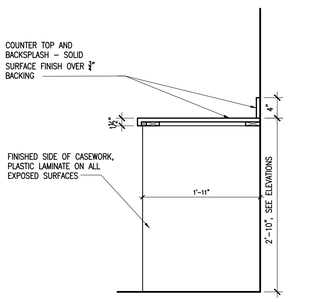

AT KNEE SPACE

5 A8.1 BASE CABINET

SCALE: 1" = 1'-0"

FINISH MATERIALS

ABBREVIATION	DESCRIPTION	STYLE, MANUFACTURER, COLOR
BASE		
	RUBBER BASE (RB)	
RB1	RUBBER BASE	6" HIGH; JOHNSONITE; COLOR 29 MOON ROCK
FLOORS		
	CARPET (CPT)	
CPT1	CARPET	24 X 24 TILE, SHAW, AMBIENT TILE 59330, TONE 30585, BRICK
	POLISHED CONCRETE (PC)	
PC	POLISHED CONCRETE	POLISHED CONCRETE WITH SEALER. CONTRACTOR TO PROTECT DURING CONSTRUCTION WITH 1/4" PLYWOOD OVER CURED SURFACE, AND TO REPAIR ANY DAMAGE CAUSED DURING CONSTRUCTION BY REPOURING FLOOR IF DEEMED NECESSARY BY THE ARCHITECT. REFER TO SPECIFICATION SECTION 033543 POLISHED CONCRETE FINISHING FOR ADDITIONAL INFORMATION.
WALLS		
	PAINT (P)	
P1	GENERAL WALL PAINT	SHERWIN WILLIAMS, SW7044 AMAZING GRAY, FLAT
P2	ACCENT PAINT	SHERWIN WILLIAMS, SW7004 SNOWBOUND, FLAT
P3	ACCENT PAINT	ROSCO, CHROMA KEY PAINT, 05711 KEY GREEN, MATTE FINISH
P4	TRIM PAINT	SHERWIN WILLIAMS, SW7004 SNOWBOUND, SEMI-GLOSS
P5	CEILING PAINT	SHERWIN WILLIAMS, SW7046 ANONYMOUS, SEMI-GLOSS
CASEWORK		
	PLASTIC LAMINATE (PL)	
PL1	CASEWORK	FORMICA, 8826-58 NEUTRAL TWILL
SS1	COUNTERTOPS	CORIAN 1/2" THICK; NIGHT SKY
CEILINGS		
	ACOUSTICAL PANEL CEILING (APC)	
APC1	GENERAL CEILING TILE	2' X 2' TILE; USG MARS CLIMA PLUS 86185; NRC MIN. 0.7 Prelude grid 15/16"
	PAINT (P)	
P5	CEILING PAINT	SHERWIN WILLIAMS, SW7046 ANONYMOUS, FLAT
MISCELLANEOUS FINISHES		
CURTAIN AND CURTAIN TRACK: BASIS OF DESIGN, ROSEBRAND, THEATRICAL VELOUR CURTAINS, 25 OZ. PER LINEAR YARD FABRIC: MEMORABLE, COLOR: PEWTER		

ROOM FINISH SCHEDULE

ROOM NO.	ROOM NAME	FLOOR FINISHES		WALL FINISHES				CEILING	REMARKS
		FLOOR	BASE	NORTH	EAST	SOUTH	WEST		
100	STUDIO	PC	RB1	P1	P1	P1	P1, P3	EXP, P-5	2, 3, 4, 5
101	OFFICE/GREEN ROOM	CPT1	RB1	P1	P1	P1	P1	APC1	1
102	TOILET	PC	RB1	P2	P2	P2	P2	APC1	--
103	STORAGE	PC	RB1	P1	P1	P1	P1	APC1	--
104	JANITOR	PC	RB1	P1	P1	P1	P1	APC1	--
X101	ELECTRICAL	PC	RB1	P1	P1	P1	P1	EXP	--
H101	CORRIDOR	PC	RB1	P2	P2	P2	P2	APC1	--

INTERIOR FINISH REMARKS

1. SEE CASEWORK ELEVATIONS AND SECTIONS FOR MATERIAL SELECTIONS AND LOCATIONS.
2. SEE 6/A8.1 FOR LOCATION OF ACCENT WALL PAINT ON WEST WALL. PROVIDE LEVEL 5 GYPSUM BOARD WALL FINISH ENTIRE EXTENT OF THIS WALL.
3. SEE 2/A1.1 AND SPECIFICATIONS FOR LOCATION OF CURTAIN AND CURTAIN TRACK IN THIS ROOM. SEE FINISH SCHEDULE FOR BASIS OF DESIGN MATERIALS.
4. SEE SPECIFIC NOTES ON A5.1 AND A8.1 FOR LOCATIONS OF PAINT COLORS ON STEEL BEAMS AND TUBES AND SOFFITS WITHIN STUDIO SPACE.
5. CEILING PAINT APPLIED TO VERSA DECK ACOUSTICAL DECK TO BE APPLIED PER MANUFACTURER'S RECOMMENDATIONS NOT TO NEGATE THE ACOUSTICAL ATTRIBUTES OF THE DECKING – PORES OF THE DECKING SHOULD NOT BE BLOCKED BY PAINT.

GENERAL NOTES

WHERE SPECIFIC PRODUCTS ARE INDICATED, ITEM DESIGNATION INCORPORATES QUALITY AND AESTHETIC APPEARANCE. SEE SPECIFICATIONS FOR EQUAL MANUFACTURER'S, IF ALLOWED, PER PRODUCT TYPE INDICATED.

WHERE MULTIPLE COLORS / PATTERNS OF A PARTICULAR FINISH ARE INDICATED, SEE NOTES AND FINISH DRAWINGS/ELEVATIONS FOR COMPLETE DESIGNATIONS, LAYOUT AND DIMENSIONS. SEE ENLARGED PLANS FOR REFERENCES.

REFERENCE REFLECTED CEILING PLANS FOR EXTENT / LOCATION OF CEILING FINISH DESIGNATIONS AND HEIGHTS.

SEE DOOR SCHEDULE AND SPECIFICATIONS FOR DOOR FINISH AND HM FRAME FINISH DESIGNATIONS.

ALL EXPOSED INTERIOR STEEL RAILINGS, RAILING POST, STEEL CHANNELS, STEEL TUBES AND SUPPORTS, HOLLOW METAL DOOR FRAMES AND HOLLOW METAL DOORS SHALL BE P4 UNLESS NOTED OTHERWISE. SEE BUILDING ELEVATIONS FOR EXACT PAINT LOCATIONS.

PAINTING FOR EXPOSED STRUCTURE AT CEILINGS INCLUDES; ROOF/FLOOR DECK, EXPOSED HVAC DUCTWORK AND ATTACHED REGISTERS, CONDUIT, PIPING, DEVICES, MISCELLANEOUS SUPPORT ELEMENTS, ETC. PAINT USING P6.

1 A8.1 FINISH MATERIALS LEGEND

SCALE: 1/8" = 1'-0"

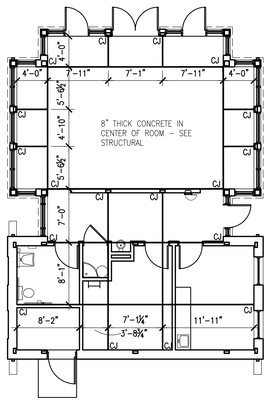

1 A8.1 CONCRETE SCORING PATTERN

SCALE: 1/8" = 1'-0"

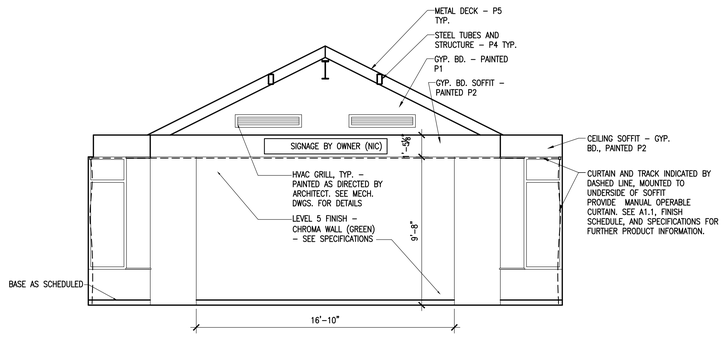

@STUDIO 100 - WEST WALL

6 A8.1 INTERIOR ELEVATION

SCALE: 1/4" = 1'-0"

The Boudreaux Group
The Boudreaux Group, Inc.
1330 Lady St., Suite 300 (29201)
P.O. Box 5905
Columbia, SC 29250
803 799 0247 P
803 771 6844 F
info@theboudreauxgroup.com
Interdisciplinary Design Architecture Interiors Planning

A/E Seal

A/E Seal

Project Title
UNIVERSITY OF SOUTH CAROLINA
SCHOOL OF JOURNALISM
BROADCAST STUDIO
CONSTRUCTION DOCUMENTS
COLUMBIA, SOUTH CAROLINA

Project No. 1330.12-3
Drawn By KGQ
Checked By RRH
Date 10.11.14

Revisions

No.	Name	Date

The drawing and the design thereon are the property of the Boudreaux Group. No reproduction, copies, or use of this drawing without written consent of The Boudreaux Group is permitted. Unauthorized use is subject to legal action by The Boudreaux Group.

Drawing Title
ROOM FINISH SCHEDULE, INTERIOR CASEWORK, AND INTERIOR ELEVATIONS

Drawing No.
A8.1

GENERAL LIFE SAFETY NOTES

1) SEE CODE RELATED INFORMATION ON SHEET T1.1
2) MAXIMUM TRAVEL DISTANCE TO AN EXIT = 200 FEET
AREAS OF RESCUE NOT REQUIRED

TRAVEL DISTANCE LEGEND

200' — 200' TO EXIT FROM REMOTE CORNER

EGRESS WIDTH LEGEND

29 / 34 — REQUIRED EGRESS WIDTH AT DOOR / EGRESS WIDTH PROVIDED AT DOOR

DOORS/PASSAGE – EGRESS WIDTH 0.2 INCHES/PERSON

TD=X'-X" — PATH OF TRAVEL DISTANCE

B=X'-X" — BUILDING DIAGONAL

S=X'-X" — DOOR SEPARATION

SYMBOL LEGEND

FE-B — FIRE EXTINGUISHER (BRACKET MOUNTED): CLASS 4A (CLASS A, B AND C FIRES), 11,250 S.F. MAXIMUM FLOOR AREA SERVED BY EXTINGUISHER

FE-C — FIRE EXTINGUISHER (IN WALL MOUNTED CABINET): CLASS 4A (CLASS A, B AND C FIRES), 11,250 S.F. MAXIMUM FLOOR AREA SERVED BY EXTINGUISHER

NEW EXIT SIGNS
SEE ELECTRICAL DRAWINGS

A — CODE REQUIRED SIGN – RESTROOM

B — CODE REQUIRED SIGN – EXTERIOR IDENTIFICATION, SEE ELEVATION 1/A4.1

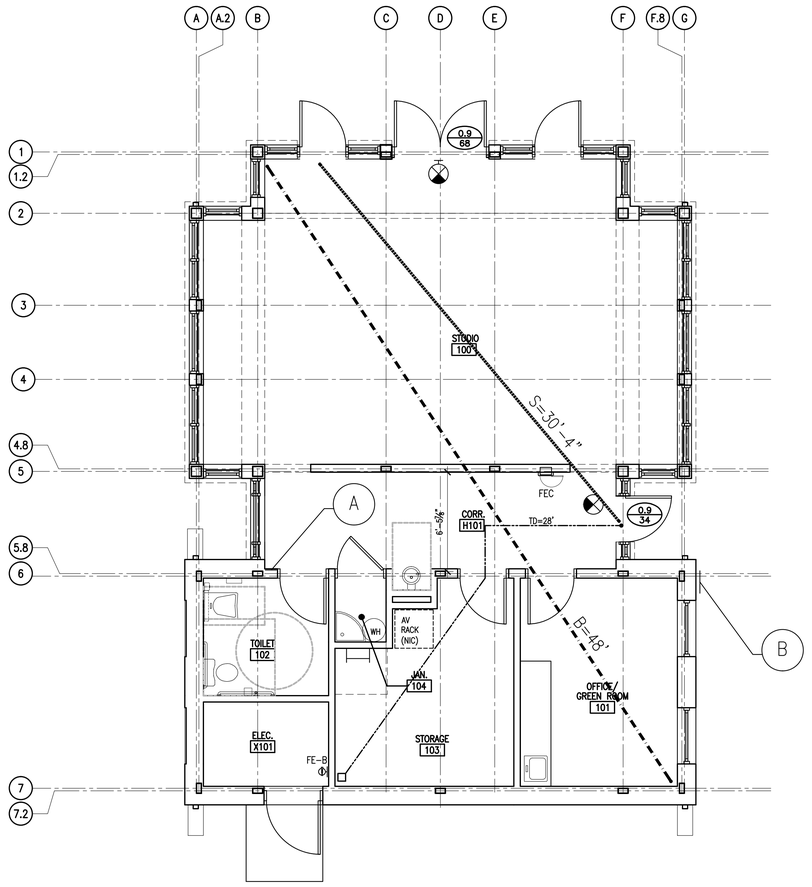

1 / AX1.1 **LIFE SAFETY PLAN**
SCALE: 1/4" = 1'-0"

GENERAL BUILDING DESIGN, REQUIRED EGRESS WIDTH

EGRESS WIDTH (PER IBC 1005):		
DESIGN NUMBER OF OCCUPANTS: 9 OCCUPANTS		
	STAIRWAYS 0.3" X OCCUPANT	OTHER EGRESS COMPONENTS 0.2" X OCCUPANT
MIN. WIDTH REQUIRED	N/A	1.8"
PROVIDED	N/A	77-5/8"

GENERAL BUILDING DESIGN, TRAVEL DISTANCE AND DEAD END CORRIDOR

	EXIT ACCESS TRAVEL DISTANCE (PER IBC 1016)	DEAD END CORRIDOR (PER IBC 1017)	COMMON PATH OF EGRESS TRAVEL (PER IBC 1014.3)
ALLOWED	200'-0" (MAX)	20'-0" (MAX)	75'-0" (MAX)
PROVIDED	28'	N/A	N/A

The Boudreaux Group
The Boudreaux Group, Inc.
1330 Lady St., Suite 500 (29201)
P.O. Box 5965
Columbia, SC 29250
803 799 0247 p
803 771 6844 f
info@boudreauxgroup.com
Interdisciplinary Design Architecture Interior Planning

A/E Seal

STATE OF SOUTH CAROLINA
ROBERT
PAUL SHEPHERD
BOUDREAUX
5046
10-01-14
REGISTERED ARCHITECT

A/E Seal

STATE OF SOUTH CAROLINA
The Boudreaux Group, Inc.
Columbia, South Carolina
B-77010
REGISTERED ARCHITECTS

Project Title
UNIVERSITY OF SOUTH CAROLINA
SCHOOL OF JOURNALISM
BROADCAST STUDIO

BID DOCUMENTS
COLUMBIA, SOUTH CAROLINA

Project No. U-646-12-3
Drawn By KGQ
Checked By RRH
Date 10.31.14

This drawing and the design thereon are the property of The Boudreaux Group, Inc. The reproduction, copying, or use of this drawing without the written consent of The Boudreaux Group, Inc. is prohibited and any infringement will be subject to legal action. Copyright © 2001 The Boudreaux Group

Revisions

No.	Name	Date

Drawing Title
LIFE SAFETY PLAN

Drawing No.
AX1.1

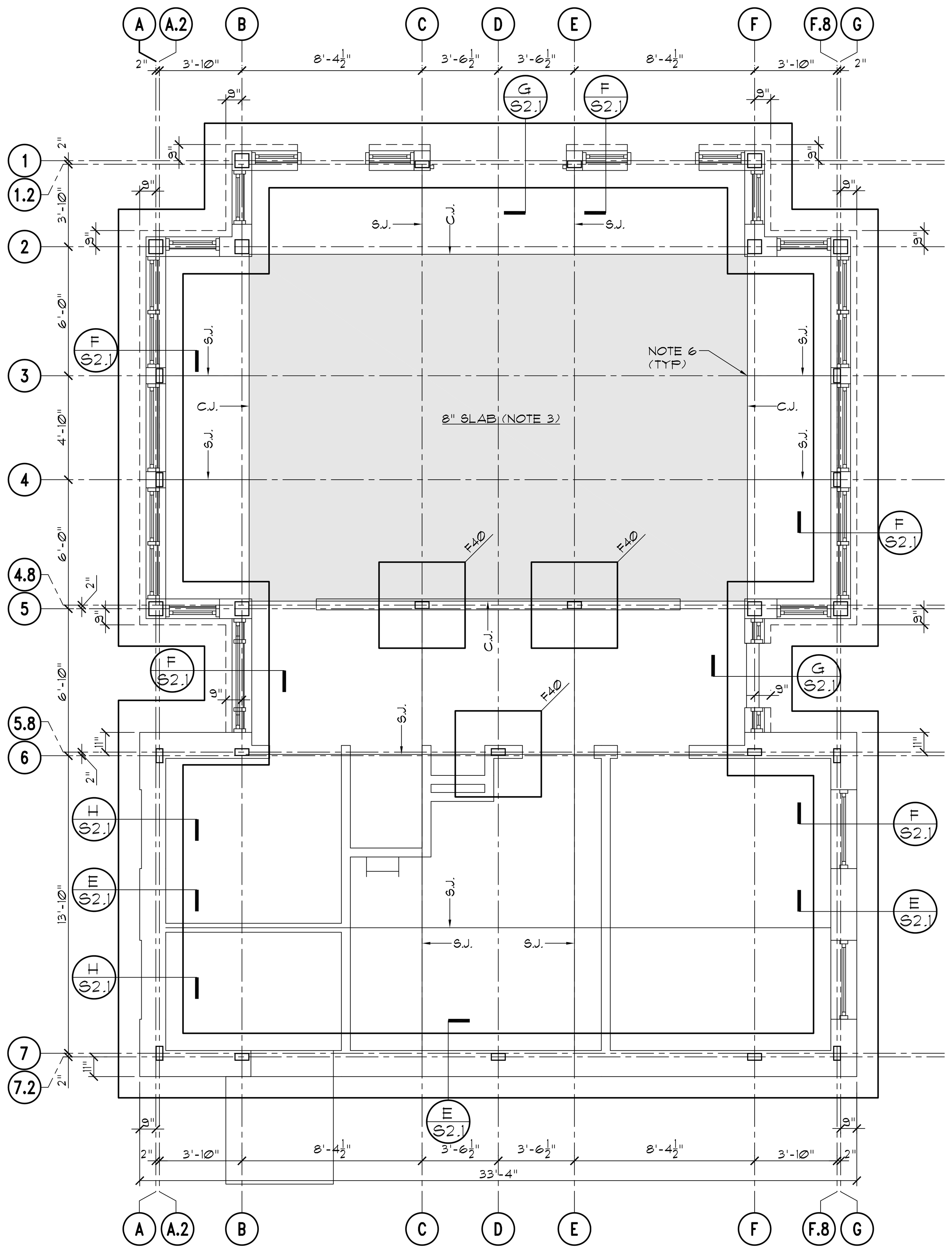

FOUNDATION PLAN (A / S1.1)

SCALE 1/4" = 1'-0"

PLAN NOTES:
1. SEE CIVIL FOR FINISH FLOOR ELEVATION.
2. TOP OF EXTERIOR FOOTINGS ARE -2'-0" BELOW FINISH FLOOR AND TOP OF INTERIOR FOOTINGS ARE -1'-4" BELOW FINISH FLOOR, UNLESS INDICATED [ ] ON PLAN.
3. FLOOR CONSTRUCTION IN SHADED AREA IS 8" SLAB ON GRADE REINFORCED WITH #5 @16" OC EACH WAY. FLOOR CONSTRUCTION IN OTHER AREAS IS 4" SLAB ON GRADE REINFORCED WITH WWF 6X6 - W1.4 X W1.4. ALL SLABS HAVE A VAPOR RETARDER AND 4" GRANULAR BASE. NO SLAB JOINTS ARE PERMITTED IN THE 8" SLAB AREA.
4. SEE DWG. S2.1 FOR SAW JOINT (S.J.), CONSTRUCTION JOINT (C.J.), AND STEP FOOTING DETAILS AND FOOTING SCHEDULE.
5. JOINT PATTERN SHOWN ABOVE IS BASED ON STEEL COLUMNS BEING ERECTED BEFORE FLOOR SLAB IS PLACED. CONTRACTOR MUST ALLOW FOR THIS SEQUENCE IN THEIR SCHEDULE IN ORDER TO AVOID NUMEROUS ISOLATION JOINTS AT THE TUBE COLUMNS. VERIFY EXACT LOCATIONS OF JOINTS WITH ARCHITECT BEFORE PLACEMENT OF FLOOR SLAB CONCRETE.
6. DO NOT LET SAW JOINTS CROSS INTO 8" SLAB AREA. FINISH ENDS OF SAW JOINTS ADJACENT TO 8" SLAB AREA WITH HAND TOOLS AS REQUIRED.

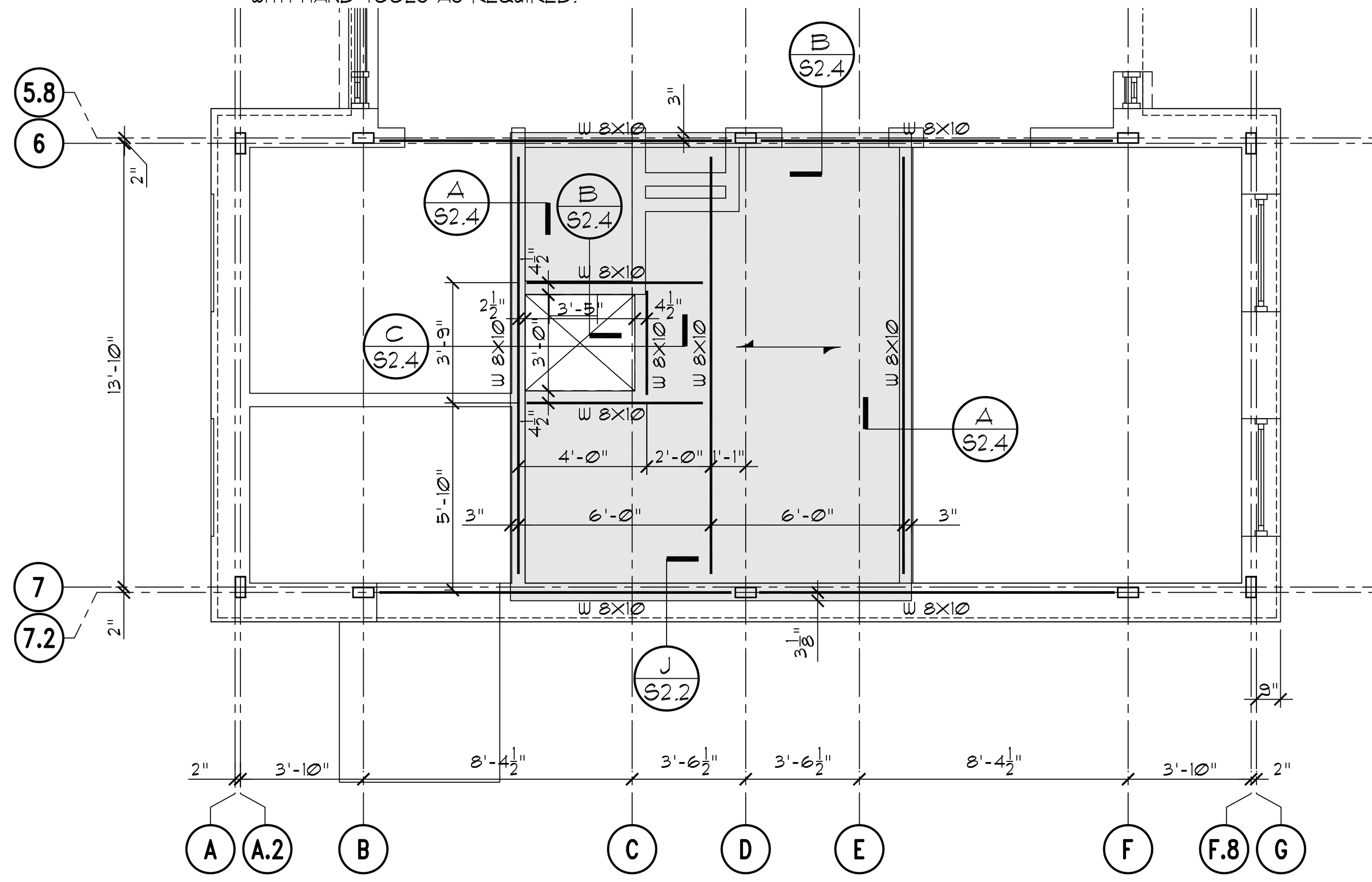

MEZZANINE FRAMING PLAN (C / S1.1)

SCALE 1/4" = 1'-0"

PLAN NOTES:
1. FLOOR CONSTRUCTION IS 2½" NORMAL WEIGHT CONCRETE REINFORCED WITH WWF 6X6 - W1.4 X W1.4 OVER 1½" 22 GAGE GALVANIZED COMPOSITE DECK (4" TOTAL SLAB THICKNESS).
2. FINISH FLOOR ELEVATION = +9'-8" ABOVE FIRST FLOOR. TOPS OF BEAMS = -4" BELOW FINISH FLOOR UNLESS NOTED OTHERWISE ON THE PLAN OR SECTIONS.

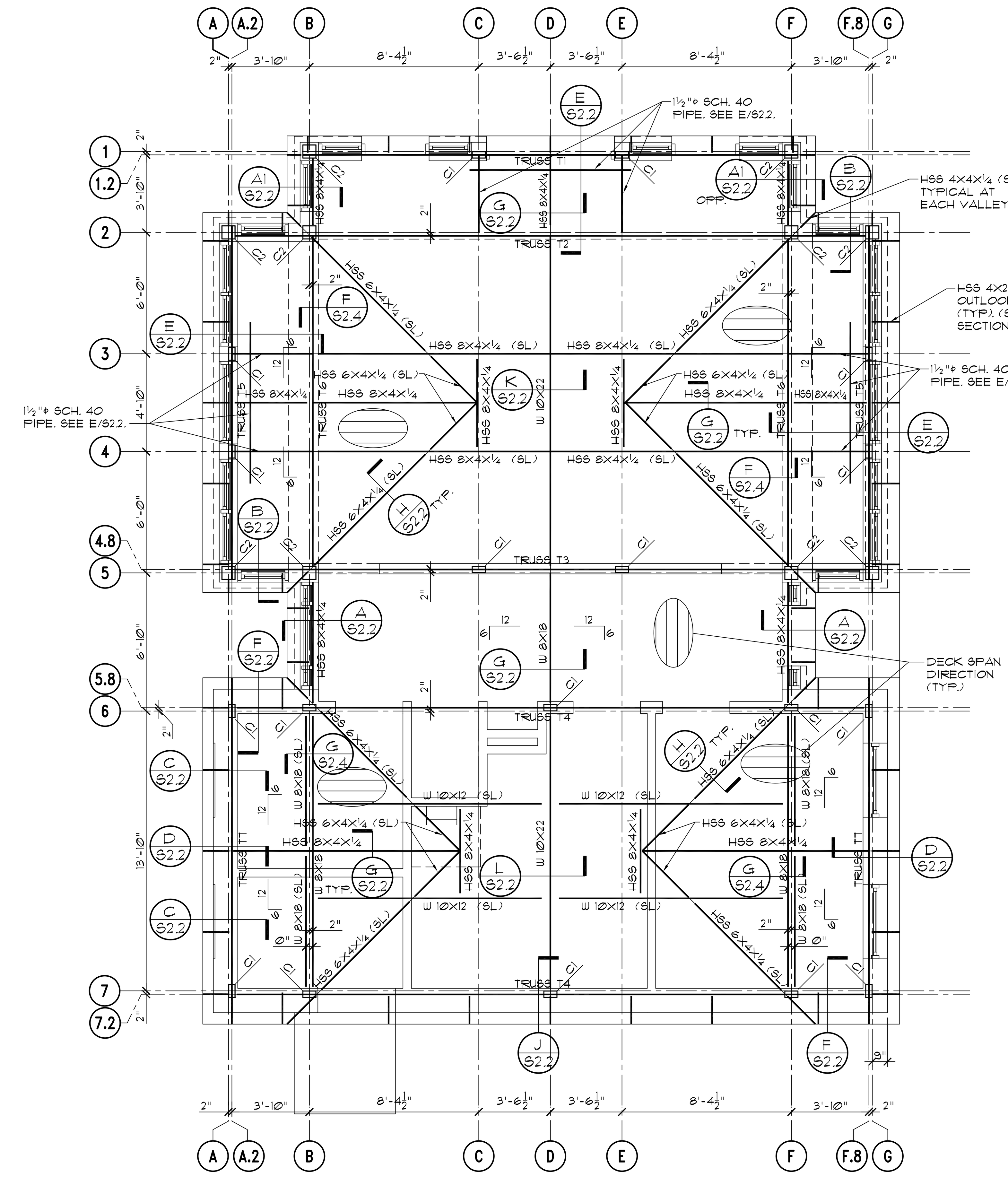

ROOF FRAMING PLAN (B / S1.1)

SCALE 1/4" = 1'-0"

PLAN NOTES:
1. ROOF CONSTRUCTION 2" 22 GAGE TYPE B GALVANIZED AND THEN PRIME PAINTED ACOUSTICAL STEEL ROOF DECK ON STEEL TUBE AND BEAM FRAMING.
2. SEE S2.3 FOR TRUSS FRAMING ELEVATIONS.
3. MEMBERS INDICATED "SL" ARE SLOPED.
4. PROVIDE CONTINUOUS 1/4" X 3½" X 3½" BENT PLs AT EACH RIDGE AND VALLEY FOR DECK SUPPORT.
5. ALL TUBE MEMBERS ARE WELDED AT BUTT JOINTS WITH BUTT WELDS. AT OTHER CONNECTIONS BETWEEN TUBE MEMBERS, USE 1/4" FILLET WELDS ALL AROUND. SHOP WELDS AND FIELD WELDS WHICH ARE EXPOSED TO VIEW IN THE COMPLETED STRUCTURE SHALL BE NEAT, CONTINUOUS, AND UNIFORM IN APPEARANCE. BUTT WELDS WHICH ARE EXPOSED TO VIEW IN THE FINISHED STRUCTURE SHALL BE GROUND SMOOTH AND FLUSH.
6. SEE S2.1 FOR COLUMN SCHEDULE.

GENERAL NOTES

1. IN CASE OF A DISCREPANCY BETWEEN THE ARCHITECTURAL AND STRUCTURAL DRAWINGS, CONSULT WITH THE ARCHITECT. FOR DIMENSIONS AND DETAILS NOT SHOWN, SEE THE ARCHITECTURAL DRAWINGS. VERIFY ALL MECHANICAL OPENINGS AND SUPPORTS WITH THE MECHANICAL EQUIPMENT.

2. DESIGN CRITERIA
   - 2.1. BUILDING CODE: 2012 INTERNATIONAL BUILDING CODE
   - 2.2. RISK CATEGORY II
   - 2.3. SEISMIC DESIGN DATA
     - 2.3.1. IMPORTANCE FACTOR 1.00
     - 2.3.2. S_S = 0.419 S_1 = 0.143
     - 2.3.3. S_{DS} = 0.335 S_{D1} = 0.158
     - 2.3.4. SITE CLASS C, SEISMIC DESIGN CATEGORY C.
     - 2.3.5. DESIGN BASE SHEAR: 5.9 KIPS
     - 2.3.6. SEISMIC RESPONSE COEFFICIENT: C_S = 0.112
     - 2.3.7. BASIC SEISMIC FORCE RESISTING SYSTEM: STEEL SYSTEMS NOT SPECIFICALLY DETAILED FOR SEISMIC RESISTANCE. R = 3.0
     - 2.3.8. ANALYSIS PROCEDURE: EQUIVALENT LATERAL FORCE PROCEDURE.
   - 2.4. WIND VELOCITY 115 MPH, EXPOSURE B, INTERNAL PRESSURE COEFFICIENT ±0.18.
   - 2.5. ROOF LIVE LOAD: 20 PSF
   - 2.6. GROUND SNOW LOAD: 10 PSF
   - 2.7. FLOOR LIVE LOADS:
     - 2.7.1. MEZZANINE: 50 PSF

3. FOUNDATION DESIGN IS BASED ON A SUBSURFACE INVESTIGATION BY GS2 ENGINEERING DATED JULY 21, 2014. (GS2 PROJECT NO. 14-1237-G)
   - 3.1. ALLOWABLE BEARING PRESSURE = 2500 PSF.
   - 3.2. STEP FOOTINGS AS REQUIRED TO LET UTILITIES PASS OVER FOOTINGS.

4. CONCRETE: 28-DAY COMPRESSIVE STRENGTHS AND EQUILIBRIUM UNIT WEIGHTS SHALL BE AS FOLLOWS:
   - 4.1. INTERIOR SLAB ON GRADE: 4000 PSI, NORMAL WEIGHT
   - 4.2. ALL OTHER CONCRETE: 3000 PSI, NORMAL WEIGHT

5. CONCRETE REINFORCING STEEL:
   - 5.1. ASTM A615, GRADE 60, EXCEPT WHERE REINFORCING IS SHOWN TO BE WELDED, USE ASTM A706 WELDABLE REINFORCING. DO NOT WELD OR TACK WELD ANY REINFORCING NOT SHOWN ON THE DRAWINGS TO BE WELDED.
   - 5.2. DETAIL IN ACCORDANCE WITH ACI DETAILING MANUAL, LATEST EDITION.
   - 5.3. LAP ALL BARS WITH CLASS B SPLICES UNLESS NOTED OTHERWISE.
   - 5.4. PROVIDE CORNER BARS OF SAME SIZE AND SPACING AS HORIZONTAL REINFORCING AT ALL WALL AND FOOTING INTERSECTIONS. LAP WITH CLASS B SPLICES.

6. STRUCTURAL STEEL
   - 6.1. MATERIALS:
     - 6.1.1. PIPE: ASTM A53, GRADE B
     - 6.1.2. TUBE: ASTM A500, GRADE B
     - 6.1.3. WIDE FLANGES AND TEES: ASTM A992, GRADE 50
     - 6.1.4. OTHER: ASTM A36
   - 6.2. FABRICATION SHALL BE IN ACCORDANCE WITH AISC SPECIFICATIONS
   - 6.3. BOLTED CONNECTIONS: ASTM A325, 3/4" DIAMETER, SNUG-TIGHTENED, BEARING TYPE CONNECTIONS WITH THREADS IN THE SHEAR PLANE UNLESS NOTED OTHERWISE.
   - 6.4. WELDED CONNECTIONS: E70XX ELECTRODES. ELECTRODES USED FOR WELDING A992 STEEL SHALL BE LOW HYDROGEN ELECTRODES.

7. STEEL DECK
   - 7.1. ROOF DECK SHALL BE 2" 22 GAGE DECK WITH PROFILE AND PROPERTIES EQUIVALENT TO VERSA-DEK BY CSI OR ER2RA BY EPIC METALS. DECK SHALL BE GALVANIZED AND THEN PRIME PAINTED. DECK FASTENERS AND ROOFING FASTENERS SHALL NOT BE VISIBLE ON BOTTOM SIDE OF DECK. ALL ROOF DECK SHALL BE ACOUSTICAL DECK.
   - 7.2. FLOOR DECK SHALL BE 1½" 22 GAGE GALVANIZED COMPOSITE STEEL DECK. MINIMUM SECTION MODULUS = 0.169 $INCHES^3$, MINIMUM MOMENT OF INERTIA = 0.143 $INCHES^4$.

8. LIGHTGAGE METAL FRAMING
   - 8.1. EXTERIOR WALL STUDS SHALL BE 6" 18 GAGE MINIMUM GALVANIZED STUDS WITH 1⅝" FLANGES. STUDS, HEADERS OVER OPENINGS, SILLS UNDER OPENINGS, JAMB STUDS, AND CONNECTIONS TO THE STRUCTURE SHALL BE DESIGNED BY AN ENGINEER REGISTERED IN SOUTH CAROLINA FOR THE DESIGN CRITERIA IN GENERAL NOTE 2 ABOVE. SHOP DRAWINGS AND CALCULATIONS FOR LIGHTGAGE METAL FRAMING AND ITS CONNECTIONS SHALL BE PREPARED AND SUBMITTED UNDER THE SEAL OF AN ENGINEER REGISTERED IN SOUTH CAROLINA.

9. REINFORCED MASONRY:
   - 9.1. CONCRETE MASONRY UNITS: ASTM C90, GRADE N, LIGHTWEIGHT.
   - 9.2. GROUT: 2500 PSI COARSE GROUT IN ACCORDANCE WITH ASTM C476, WITH 8" TO 11" SLUMP. GROUT ALL CELLS WHICH CONTAIN REINFORCEMENT OR WHICH ARE BELOW FINISH FLOOR OR FINISH GRADE.
   - 9.3. MORTAR: TYPE S IN ACCORDANCE WITH ASTM C270, USING MORTAR CEMENT.
   - 9.4. REINFORCING STEEL SHALL CONFORM TO ASTM A615, GRADE 60.
   - 9.5. LAP ALL #5 BARS 2'-7".

10. POST-INSTALLED ANCHORS INSTALLED IN HARDENED CONCRETE SHALL BE AS SHOWN IN THE TABLE ON S2.1.

SITE PREPARATION NOTES

THE OWNER WILL HIRE A SPECIAL INSPECTOR TO MONITOR EARTHWORK OPERATIONS AND PERFORM TESTING. UNDER THE BUILDING AND TO A LINE 5 FEET BEYOND THE BUILDING THE FOLLOWING SITE WORK SHALL BE PERFORMED UNDER THE OBSERVATION OF THE SPECIAL INSPECTOR:

1. STRIP ALL TOPSOIL AND STOCKPILE.
2. REMOVE ALL UNSUITABLE MATERIALS FROM SITE. THIS INCLUDES SURFACE VEGETATION, ORGANIC SURFACE SOILS, PAVEMENT, TREE STUMPS, ROOTS, CONSTRUCTION DEBRIS, EXISTING STRUCTURES AND FOUNDATIONS, EXISTING KOI POND, UTILITIES AND ANY UNSTABLE SURFACE MATERIALS.
3. THE SUBGRADE SHALL BE DENSIFIED IN PLACE TO A DEPTH OF 3 FEET BELOW THE BOTTOM OF FOOTING ELEVATION. IT MAY BE NECESSARY TO OVER-EXCAVATE IN ORDER TO DENSIFY THE SOILS TO THE REQUIRED DEPTH OF 3 FEET BELOW THE BOTTOM OF FOOTINGS. DENSIFICATION SHALL BE DONE USING A LARGE SMOOTH-DRUM VIBRATORY ROLLER BY MAKING SEVERAL PASSES OVER THE ARE TO BE DENSIFIED IN A CROSSING PATTERN. SEE THE PROJECT SOILS REPORT FOR REQUIRED DENSIFICATION CRITERIA AND MORE INFORMATION.
4. UPON COMPLETION OF DENSIFICATION, THE ENTIRE SUBGRADE SHALL BE PROOFROLLED USING A LOADED 20-TON TANDEM AXLE DUMP TRUCK OR SIMILAR LOADED VEHICLE. AT LEAST FOUR PASSES SHALL BE MADE OVER EACH SECTION, WITH THE LAST TWO PASSES PERPENDICULAR TO THE FIRST TWO. AREAS WHICH PUMP, RUT OR DEFLECT EXCESSIVELY SHALL BE DENSIFIED IN PLACE OR UNDERCUT AND BACKFILLED AS SPECIFIED IN NOTE 5.
5. PLACE NEW APPROVED FILL MATERIAL IN 8" MAXIMUM LOOSE LIFT THICKNESSES AND COMPACT EACH LIFT TO 98% OF THE SOIL'S STANDARD PROCTOR MAXIMUM DRY DENSITY IN ACCORDANCE WITH ASTM D-698. FILL MATERIALS, MOISTURE CONTENT, AND COMPACTION EQUIPMENT SHALL COMPLY WITH THE RECOMMENDATIONS IN THE PROJECT SOILS REPORT AND SHALL BE APPROVED BY THE SPECIAL INSPECTOR.
6. ALL FOOTING BOTTOMS SHALL BE COMPACTED USING A MECHANICAL TAMPER.
7. ALL NEW FILL SHALL BE LABORATORY TESTED FOR COMPACTION. PROVIDE ONE COMPACTION TEST FOR EACH 1500 SQUARE FEET OF FILL AREA FOR EACH VERTICAL LIFT OF FILL. LOCATION OF TESTS TO BE AT RANDOM AND AT THE DISCRETION OF THE SPECIAL INSPECTOR. SPECIAL INSPECTOR SHALL VERIFY FOOTING BOTTOMS FOR THE DESIGN BEARING PRESSURE BEFORE CONCRETE IS PLACED.
8. SEE THE EARTHWORK SPECIFICATIONS AND PROJECT SOILS REPORT FOR ADDITIONAL INFORMATION.

JOHNSON&KING ENGINEERS
structural consultants
1223 Elmwood Avenue | 803.779.8830 T
Columbia, SC 29201 | 803.779.8831 F

The Boudreaux Group
1200 Park Street (29201)
P.O. Box 5695
Columbia, SC 29250
803 799 0247 p
803 771 6844 f
info@boudreauxgroup.com
Interdisciplinary Design Architecture Interiors Planning

A/E Seal: SOUTH CAROLINA REGISTERED PROFESSIONAL ENGINEER No. 8736 RICHARD A. BURCH 9.26.14

A/E Seal: SOUTH CAROLINA JOHNSON & KING ENGINEERS No. C00165 CERTIFICATE OF AUTHORIZATION

Project Title: UNIVERSITY OF SOUTH CAROLINA SCHOOL OF JOURNALISM BROADCAST STUDIO

BID DOCUMENTS

COLUMBIA, SOUTH CAROLINA

Project No.	Drawn By	Checked By	Date
U-646-12-3	RAB	JLM	10.31.14

Revisions No.	Name	Date

This drawing and the design thereon are the property of The Boudreaux Group, Inc. The reproduction, copying, or use of this drawing without the written consent of The Boudreaux Group, Inc. is prohibited and any infringement will be subject to legal action. Copyright © 2001 The Boudreaux Group

Drawing Title: FOUNDATION AND ROOF FRAMING PLANS

Drawing No. S1.1

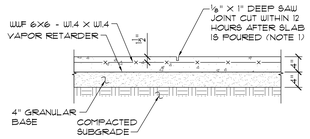

SAW JOINT DETAIL — A — S2.1

NO SCALE

NOTES:
1. SAW JOINTS ARE NOTED "SJ." ON FOUNDATION PLAN.
2. CONSTRUCTION JOINTS MAY BE SUBSTITUTED FOR SAW JOINTS AT CONTRACTOR'S OPTION.
3. FILL ALL SLAB JOINTS WITH JOINT FILLER PER SPECIFICATION Ø33ØØØ.

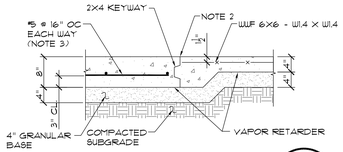

CONSTRUCTION JOINT DETAIL — B — S2.1

NO SCALE

NOTES:
1. CONSTRUCTION JOINTS AROUND PERIMETER OF 8" SLAB AREA ARE NOTED "CJ." ON FOUNDATION PLAN.
2. SAW CUT TOPS OF CONSTRUCTION JOINTS AND FILL WITH JOINT FILLER PER SPECIFICATION Ø33ØØØ.
3. REINFORCEMENT IN 8" SLAB MUST BE SUPPORTED ON CHAIRS.

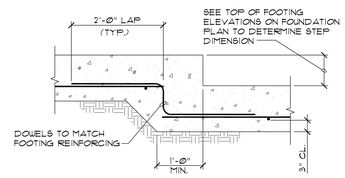

STEP FOOTING DETAIL — C — S2.1

NO SCALE

NOTES:
1. SEE FOUNDATION PLAN FOR LOCATIONS OF FOOTING STEPS.
2. IN CASES WHERE UTILITIES WOULD BE IN THE FOOTING, OR BELOW THE FOOTING WITH LESS THAN 8" OF EARTH BETWEEN BOTTOM OF FOOTING AND TOP OF UTILITY, PROVIDE ADDITIONAL STEPS AS REQUIRED TO LET UTILITIES PASS OVER TOPS OF FOOTINGS.

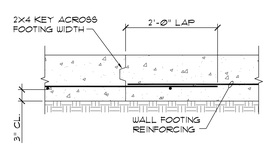

WALL FOOTING CONSTRUCTION JOINT DETAIL — D — S2.1

NO SCALE

NOTES:
1. THIS DETAIL SHALL BE USED AT ALL LOCATIONS IN WALL FOOTINGS WHERE CONCRETE POURS ARE STOPPED.

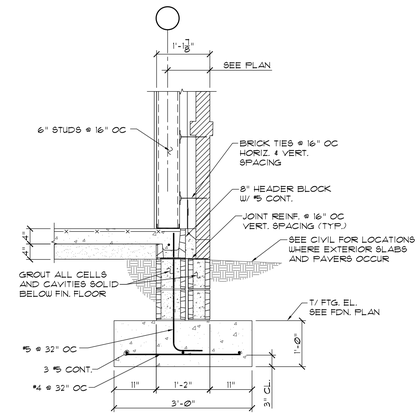

SECTION — E — S2.1

SCALE ¾" = 1'-Ø"

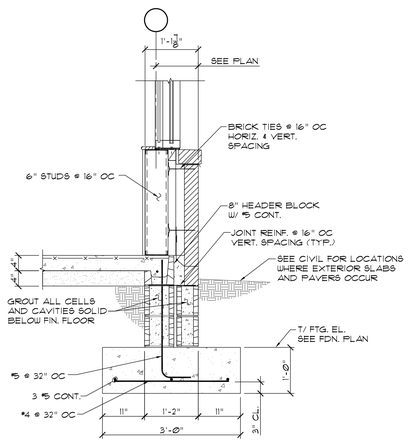

SECTION — F — S2.1

SCALE ¾" = 1'-Ø"

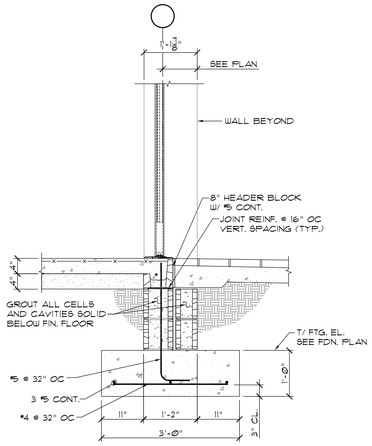

SECTION — G — S2.1

SCALE ¾" = 1'-Ø"

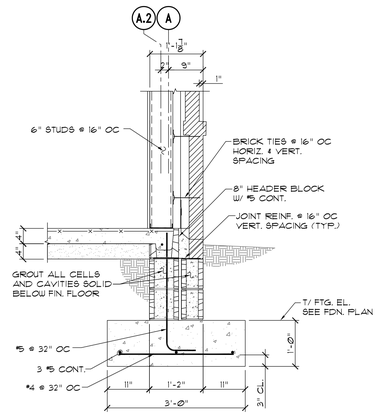

SECTION — H — S2.1

SCALE ¾" = 1'-Ø"

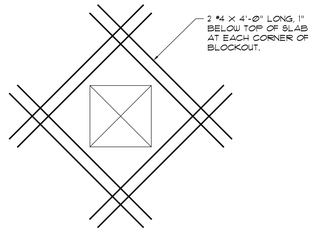

SLAB BLOCKOUT DETAIL — J — S2.1

SCALE ¾" = 1'-Ø"

NOTES:
1. THIS DETAIL IS TYPICAL AT ALL SLAB ON GRADE BLOCKOUTS. BLOCKOUTS AND REINFORCING ARE NOT SHOWN ON STRUCTURAL PLANS.
2. BLOCKOUTS ARE NOT PERMITTED IN POLISHED CONCRETE AREAS.

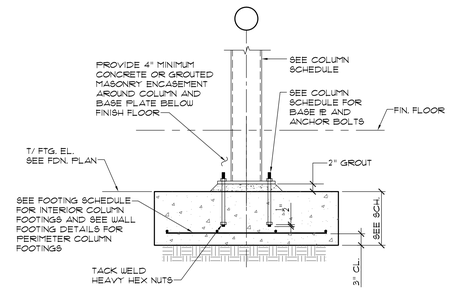

TYPICAL COLUMN BASE AND FOOTING DETAIL — K — S2.1

SCALE ¾" = 1'-Ø"

NOTES:
1. PROVIDE LEVELING NUTS UNDER ALL BASE PLATES.

COLUMN SCHEDULE					
	C1	C2			
ROOF FRAMING					
FIRST FLOOR	HSS 8X4X¼	HSS 8X8X¼			
T/ FTG. (SEE FDN. PLAN)					
BASE PLATE	¾" X 15" X 15"	¾" X 15" X 15"			
ANCHOR BOLTS	(4) ¾"Ø X 1'-2"	(4) ¾"Ø X 1'-2"			
NOTES / DETAILS					

NOTES:
1. ANCHOR BOLTS SHALL BE ASTM F1554, GRADE 36.
2. PROVIDE ⅜" CAP PL ON TOP OF C2 COLUMNS, GROUND SMOOTH AND FLUSH ALL AROUND. TOP OF CAP PL IS AT +1Ø'-3¼".
3. COLUMNS SHALL BE ENCASED IN A MINIMUM OF 4" OF CONCRETE OR SOLID GROUTED MASONRY BELOW GRADE.

FOOTING SCHEDULE			
MARK	SIZE	THICKNESS	REINFORCING EACH WAY
F4Ø	4'-Ø" X 4'-Ø"	12"	4 #5

CONCRETE POST-INSTALLED ANCHOR TABLE

TYPE	MANUFACTURER	PRODUCT	DIAMETER/SIZE	
SCREW ANCHOR	HILTI	KWIK HUS-EZ (KH-EZ)	¼" TO ¾"	
	POWERS	WEDGE-BOLT+ W/ WEDGE BIT	⅜" TO ¾"	
	SIMPSON	TITEN HD	⅜" TO ¾"	
ROD HANGER	HILTI	KWIK HUS EZ-I	⅜" TO ½"	
	POWERS	VERTIGO+ W/ WEDGE BIT	¼" TO ½"	
		SNAKE+	⅜" TO ½"	
	SIMPSON	TITEN HD ROD HANGER	⅜", ½"	
EXPANSION ANCHOR	HILTI	KWIK BOLT TZ	⅜" TO ¾"	
	POWERS	POWER-STUD+ SD1	⅜" TO 1"	
	SIMPSON	STRONG-BOLT 2	⅜" TO ⅞"	
ADHESIVE ANCHOR	HILTI	HIT-HY 200 SAFE SET	ALL THREAD ROD	⅜" TO 1¼"
			REBAR	#3 TO #8
		HIT-RE 500-SD	ALL THREAD ROD	⅜" TO 1¼"
			REBAR	#3 TO #10
	POWERS	PE1000+	ALL THREAD ROD	½" TO ⅞"
			REBAR	#3 TO #7
	SIMPSON	SET-XP	ALL THREAD ROD	⅜" TO 1¼"
			REBAR	#3 TO #10
		AT-XP	ALL THREAD ROD	⅜" TO 1¼"
			REBAR	#3 TO #10

NOTES:
1. THIS SELECTION TABLE SHALL BE USED WHEN ANCHOR RODS OR REBARS WITH ANCHOR ADHESIVE, EXPANSION ANCHORS, OR SCREW ANCHORS ARE CALLED OUT ON THE DRAWINGS. THE ADHESIVES SHOWN SHALL ALSO BE USED WHERE THE TERM "EPOXY" IS USED ON THE STRUCTURAL DRAWINGS.
2. ADHESIVE ANCHORS HOLES SHALL BE CLEANED PER THE MANUFACTURER RECOMMENDATIONS INCLUDING USING A BRUSH AND 100 PSI MINIMUM OR MANUFACTURER REQUIRED COMPRESSED AIR.
3. ANCHORS SHALL BE INSTALLED IN ACCORDANCE WITH THE MANUFACTURER'S PRINTED INSTALLATION INSTRUCTIONS (MPII).
4. SCREW AND EXPANSION ANCHORS SHALL MEET THE EMBEDMENT DEPTHS AS SPECIFIED IN THE DRAWINGS BUT NOT LESS THAN THE MINIMUM OF 7 TIMES THE ANCHOR DIAMETER, U.N.O.
5. ADHESIVE ANCHORS SHALL MEET THE EMBEDMENT DEPTHS AS SPECIFIED IN THE DRAWINGS. IF NO EMBEDMENT IS SPECIFIED, EMBED 12 TIMES THE ANCHOR DIAMETER.
6. CONTACT THE ENGINEER OF RECORD FOR APPROVAL OF ANY OTHER ANCHOR TYPE OR DIAMETER PRIOR TO INSTALLATION.

JOHNSON&KING ENGINEERS
structural consultants
1223 Elmwood Avenue | 803.779.8830 T
Columbia, SC 29201 | 803.779.8831 F

The Boudreaux Group
1200 Park Street (29201)
P.O. Box 5905
Columbia, SC 29250
803 799 0400 T
803 771 6844 F
info@boudreauxgroup.com
Interdisciplinary Design. Architecture Interiors Planning

A/E Seal

A/E Seal

Project Title
UNIVERSITY OF SOUTH CAROLINA
SCHOOL OF JOURNALISM
BROADCAST STUDIO

BID DOCUMENTS
COLUMBIA, SOUTH CAROLINA

Project No.
U-646-12-3

Drawn By
MAB

Checked By
JLM

Date
10.31.14

The drawings and the designs thereon are the property of The Boudreaux Group, Inc. and may not be used in any way without the written consent of The Boudreaux Group, Inc. Copyright © 2011. All rights reserved.

Revisions

No.	Name	Date

Drawing Title
STRUCTURAL DETAILS

Drawing No.
S2.1

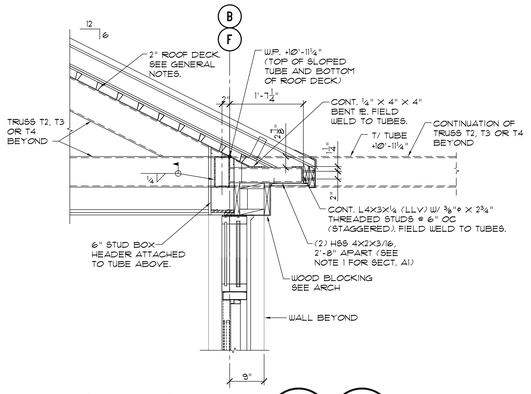

SECTION A / A1 — S2.2

SCALE ¾" = 1'-Ø"

NOTES:
1. AT SECT. A1, SHOP WELD ONE HSS 4X2 OUTLOOKER TO END OF TUBE TRUSS ON COLUMN LINE 1.

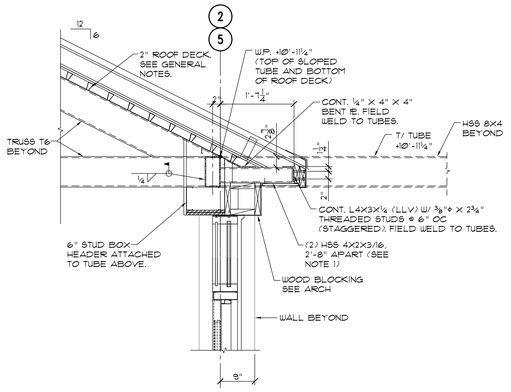

SECTION B — S2.2

SCALE ¾" = 1'-Ø"

NOTES:
1. SHOP WELD ONE HSS 4X2 OUTLOOKER TO ENDS OF TUBE TRUSSES ON COLUMN LINES A AND G.

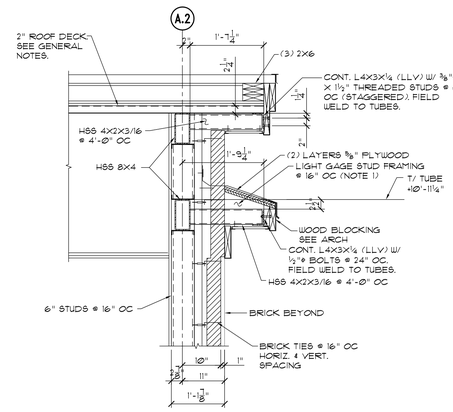

SECTION C — S2.2

SCALE ¾" = 1'-Ø"

NOTES:
1. LIGHT GAGE FRAMING SUPPLIER SHALL PROVIDE FRAMING FOR CORNICE @ 16" OC (NOT SHOWN ABOVE). FRAMING SHALL BE SUPPORTED ON TUBE OUTLOOKERS. SEE THE ARCHITECTURAL DRAWINGS FOR DIMENSIONS AND DETAILS.

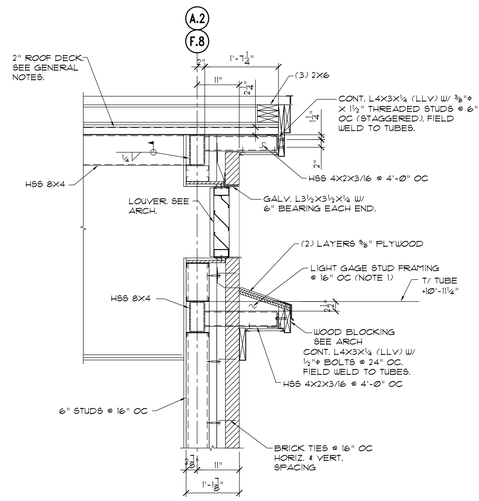

SECTION D — S2.2

SCALE ¾" = 1'-Ø"

NOTES:
1. LIGHT GAGE FRAMING SUPPLIER SHALL PROVIDE FRAMING FOR CORNICE @ 16" OC (NOT SHOWN ABOVE). FRAMING SHALL BE SUPPORTED ON TUBE OUTLOOKERS. SEE THE ARCHITECTURAL DRAWINGS FOR DIMENSIONS AND DETAILS.

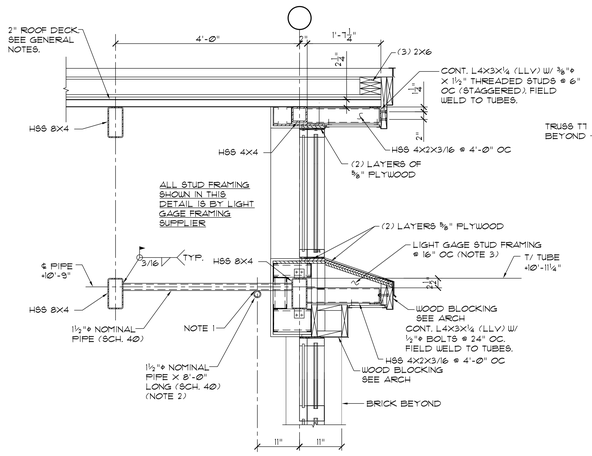

SECTION E — S2.2

SCALE ¾" = 1'-Ø"

NOTES:
1. WHERE "NOTE 1" IS INDICATED, CONNECT 8'-Ø" LONG PIPE TO UPPER PIPES (2 PLACES) WITH CROSS GRID CONNECTORS MADE FOR PIPE GRID CONSTRUCTION.
2. PROVIDE DOMED WELDED PIPE CAPS AT ENDS OF 8'-Ø" LONG PIPE.
3. LIGHT GAGE FRAMING SUPPLIER SHALL PROVIDE FRAMING FOR CORNICE @ 16" OC (NOT SHOWN ABOVE). FRAMING SHALL BE SUPPORTED ON TUBE OUTLOOKERS. SEE THE ARCHITECTURAL DRAWINGS FOR DIMENSIONS AND DETAILS.

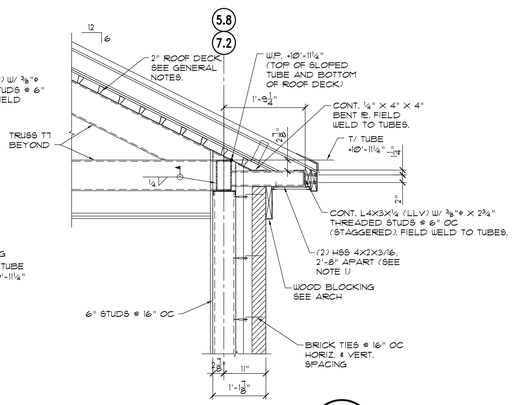

SECTION F — S2.2

SCALE ¾" = 1'-Ø"

NOTES:
1. SHOP WELD ONE HSS 4X2 OUTLOOKER TO ENDS OF TUBE TRUSSES ON COLUMN LINES A.2 AND F.8.

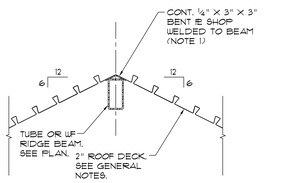

TYPICAL RIDGE DETAIL

DETAIL G — S2.2

SCALE ¾" = 1'-Ø"

NOTES:
1. STEEL DETAILER SHALL SET ELEVATION OF RIDGE BEAM SO THAT TOP SURFACE OF BENT TE IS AT BOTTOM OF DECK.
2. THIS DETAIL IS TYPICAL AT RIDGES EXCEPT WHERE NOTED OTHERWISSDE ON THE ROOF FRAMING PLAN (SEE K/S2.2 AND L/S2.2).

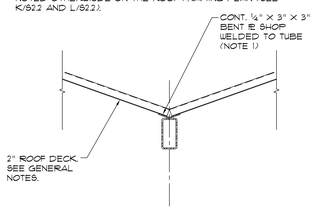

TYPICAL VALLEY DETAIL

DETAIL H — S2.2

SCALE ¾" = 1'-Ø"

NOTES:
1. STEEL DETAILER SHALL SET ELEVATION OF VALLEY TUBE SO THAT TOP SURFACE OF BENT TE IS AT BOTTOM OF DECK.

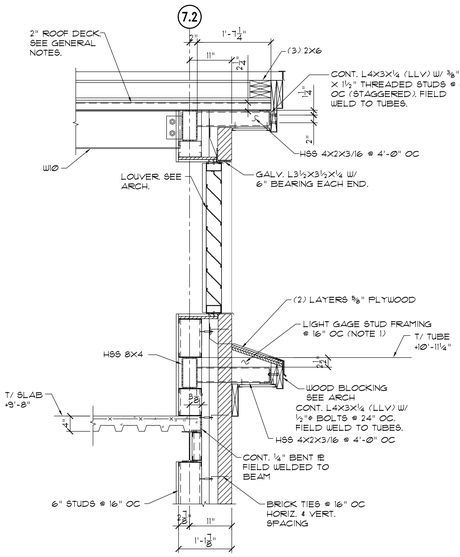

SECTION J — S2.2

SCALE ¾" = 1'-Ø"

NOTES:
1. LIGHT GAGE FRAMING SUPPLIER SHALL PROVIDE FRAMING FOR CORNICE @ 16" OC (NOT SHOWN ABOVE). FRAMING SHALL BE SUPPORTED ON TUBE OUTLOOKERS. SEE THE ARCHITECTURAL DRAWINGS FOR DIMENSIONS AND DETAILS.

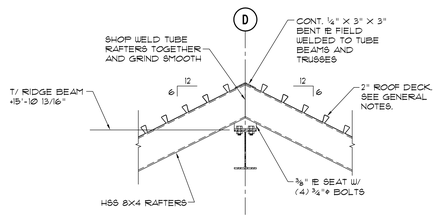

DETAIL K — S2.2

SCALE ¾" = 1'-Ø"

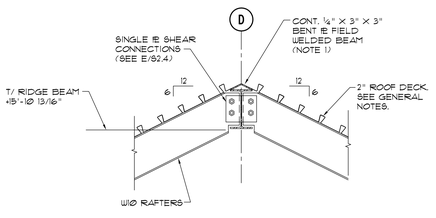

DETAIL L — S2.2

SCALE ¾" = 1'-Ø"

NOTES:
1. STEEL DETAILER SHALL SET ELEVATION OF RIDGE BEAM SO THAT TOP SURFACE OF BENT TE IS AT BOTTOM OF DECK.

The Boudreaux Group
Interdisciplinary Design. Architecture Interiors Planning
1200 Park Street (29201)
P.O. Box 6925
Columbia, SC 29260
803 799 0400 p
803 771 6844 f
info@boudreauxgroup.com

A/E Seal

SOUTH CAROLINA REGISTERED PROFESSIONAL — No. 8736 — RICHARD A. BOUDREAUX — 9.26.14

A/E Seal

SOUTH CAROLINA — JOHNSON & KING ENGINEERS No. C00165 — CERTIFICATE OF AUTHORIZATION

Project Title
UNIVERSITY OF SOUTH CAROLINA
SCHOOL OF JOURNALISM
BROADCAST STUDIO
BID DOCUMENTS
COLUMBIA, SOUTH CAROLINA

Project No. U-646-12-3
Drawn By EJS
Checked By JLM
Date 10.31.14

The drawings, specifications, and ideas, designs, arrangements and plans indicated thereon are the property of The Boudreaux Group, Inc. and shall not be used in whole or part of this drawing without the written permission of The Boudreaux Group, Inc. is prohibited and any unauthorized use will be prosecuted to the fullest extent of the law. Copyright © 2021 The Boudreaux Group

Revisions

No.	Name	Date

Drawing Title
STRUCTURAL DETAILS

Drawing No.
S2.2

JOHNSON & KING ENGINEERS
structural consultants
1223 Elmwood Avenue | 803.779.8830 T
Columbia, SC 29201 | 803.779.8831 F

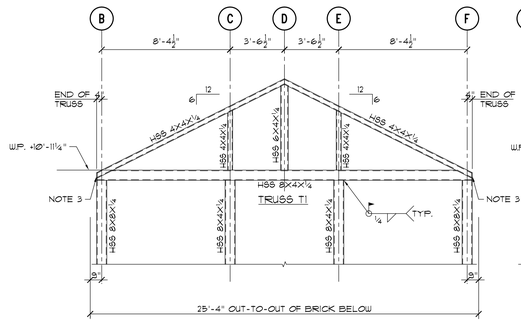

COLUMN LINES 1/1.2

FRAMING ELEVATION A S2.3

SCALE ¼" = 1'-Ø"

NOTES:
1. TRUSS SHALL BE A SINGLE SHOP-WELDED ASSEMBLY.
2. ALL WELDS SHALL BE GROUND SMOOTH AND FLUSH.
3. CAP ENDS OF TUBE TRUSS WITH ¼" CLOSURE PL's GROUND SMOOTH AND FLUSH ALL AROUND.

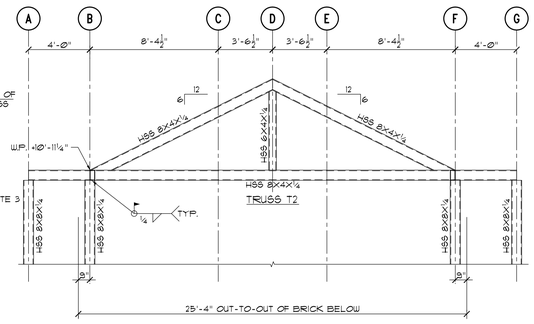

COLUMN LINE 2

FRAMING ELEVATION B S2.3

SCALE ¼" = 1'-Ø"

NOTES:
1. TRUSS SHALL BE A SINGLE SHOP-WELDED ASSEMBLY.
2. ALL WELDS SHALL BE GROUND SMOOTH AND FLUSH.

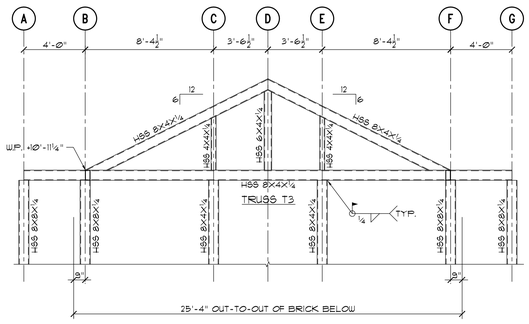

COLUMN LINES 4.8/5

FRAMING ELEVATION C S2.3

SCALE ¼" = 1'-Ø"

NOTES:
1. TRUSS SHALL BE A SINGLE SHOP-WELDED ASSEMBLY.
2. ALL WELDS SHALL BE GROUND SMOOTH AND FLUSH.

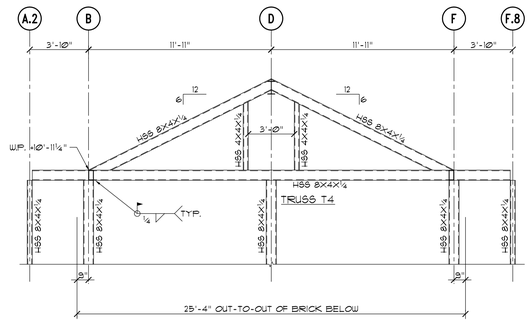

COLUMN LINES 5.8/6 AND 7/7.2

FRAMING ELEVATION D S2.3

SCALE ¼" = 1'-Ø"

NOTES:
1. TRUSS SHALL BE A SINGLE SHOP-WELDED ASSEMBLY.
2. ALL WELDS SHALL BE GROUND SMOOTH AND FLUSH.

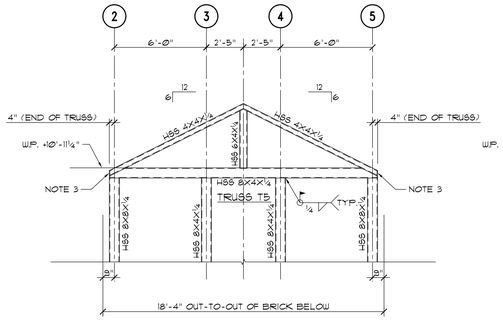

COLUMN LINES A.2, F.8

FRAMING ELEVATION E S2.3

SCALE ¼" = 1'-Ø"

NOTES:
1. TRUSS SHALL BE A SINGLE SHOP-WELDED ASSEMBLY.
2. ALL WELDS SHALL BE GROUND SMOOTH AND FLUSH.
3. CAP ENDS OF TUBE TRUSS WITH ¼" CLOSURE PL's GROUND SMOOTH AND FLUSH ALL AROUND.

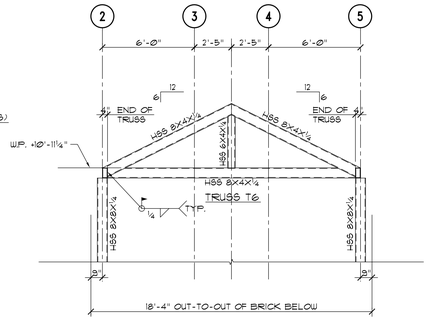

COLUMN LINES B, F

FRAMING ELEVATION F S2.3

SCALE ¼" = 1'-Ø"

NOTES:
1. TRUSS SHALL BE A SINGLE SHOP-WELDED ASSEMBLY.
2. ALL WELDS SHALL BE GROUND SMOOTH AND FLUSH.

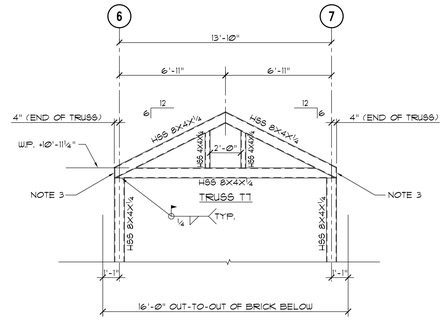

COLUMN LINES A.2, F.8

FRAMING ELEVATION G S2.3

SCALE ¼" = 1'-Ø"

NOTES:
1. TRUSS SHALL BE A SINGLE SHOP-WELDED ASSEMBLY.
2. ALL WELDS SHALL BE GROUND SMOOTH AND FLUSH.
3. CAP ENDS OF TUBE TRUSS WITH ¼" CLOSURE PL's GROUND SMOOTH AND FLUSH ALL AROUND.

JOHNSON&KING ENGINEERS
structural consultants
1223 Elmwood Avenue | 803.779.8830 T
Columbia, SC 29201 | 803.779.8831 F

The Boudreaux Group
1200 Park Street (29201)
P.O. Box 5905
Columbia, SC 29250
803 799 0400 T
803 771 6844 F
info@boudreauxgroup.com
Interdisciplinary Design Architecture Interiors Planning

A/E Seal



A/E Seal

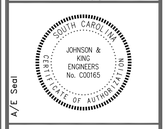

Project Title

UNIVERSITY OF SOUTH CAROLINA
SCHOOL OF JOURNALISM
BROADCAST STUDIO

BID DOCUMENTS

COLUMBIA, SOUTH CAROLINA

Project No.
U-646-12-3

Drawn By
RHS

Checked By
JLM

Date
10.31.14

The drawings and specifications and the ideas, designs and arrangements represented thereby are and shall remain the property of the Boudreaux Group. No part thereof shall be copied, disclosed to others or used in connection with any work or project other than the specific project for which they have been prepared and developed without the written permission of the Boudreaux Group. Copyright © 2001 Boudreaux Group

Revisions

No.	Name	Date

Drawing Title

STRUCTURAL DETAILS

Drawing No.

S2.3

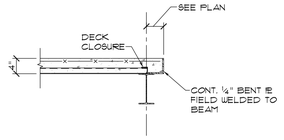

TYP. DETAIL AT OPENINGS AND SLAB EDGES

SECTION A
SCALE ¾" = 1'-0" — S2.4

NOTES:
1. USE THIS SECTIONS AT ALL SIDES OF SLAB OPENINGS AND AT SLAB EDGES WHERE NO OTHER SECTION IS SHOWN ON THE PLANS.

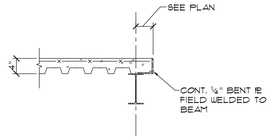

TYP. DETAIL AT OPENINGS AND SLAB EDGES

SECTION B
SCALE ¾" = 1'-0" — S2.4

NOTES:
1. USE THIS SECTIONS AT ALL SIDES OF SLAB OPENINGS AND AT SLAB EDGES WHERE NO OTHER SECTION IS SHOWN ON THE PLANS.

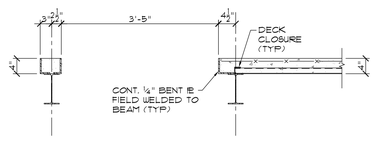

SECTION C
SCALE ¾" = 1'-0" — S2.4

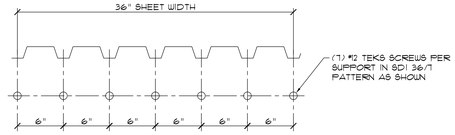

TYPICAL ROOF DECK ATTACHMENT DETAIL

DETAIL D
SCALE ¾" = 1'-0" — S2.4

NOTES:
1. PROVIDE #10 TEKS SCREWS @ 16" OC IN SIDELAPS.
2. PROVIDE #12 SCREWS @ 6" OC AROUND ENTIRE PERIMETER.
3. AT STEEL ROOF MEMBERS WHICH ARE TOO THICK FOR SCREWS, ⅝"ø PUDDLE WELDS SHALL BE SUBSTITUTED FOR SCREWS.



BRICK LINTEL SCHEDULE

OPENING WIDTH	LINTEL	END BEARING	REMARKS
6'-0" OR LESS	L 3½X3½X¼	6"	USE AT LOUVERS
6'-0" OR LESS	L 5X3½X¼ (LLH)	6"	USE AT DOORS & WINDOWS

NOTES:
1. USE THESE LINTELS AT ALL OPENINGS IN BRICK VENEER WHERE NO OTHER LINTEL IS SHOWN ON THE STRUCTURAL PLANS OR SECTIONS.
2. SEE THE ARCHITECTURAL DRAWINGS FOR OPENINGS SIZES AND LOCATIONS.
3. LINTEL ANGLES SHALL BE HOT-DIPPED GALVANIZED.

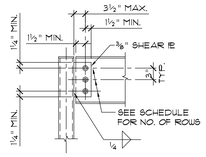

SINGLE PL SHEAR CONNECTION

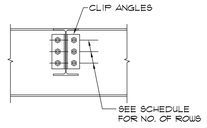

CLIP ANGLE CONNECTION

TYPICAL BEAM CONNECTION SCHEDULE

BEAM SIZE	NO. ROWS, ¾"ø A325 BOLTS	
	SINGLE PL CONN.	CLIP ANGLE CONN.
W8, W10	2	2
W12, W14	3	3
W16	4	4

TYPICAL BEAM CONNECTIONS E
NO SCALE — S2.4

NOTES:
1. USE THESE CONNECTIONS WHERE NO OTHER CONNECTION IS SHOWN IN THE PLANS OR DETAILS.
2. USE CLIP ANGLE CONNECTIONS WHEREVER POSSIBLE. WHERE NOT POSSIBLE, USE SINGLE PLATE SHEAR CONNECTIONS.

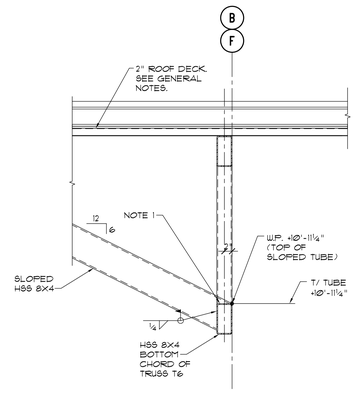

SECTION F
SCALE ¾" = 1'-0" — S2.4

NOTES:
1. CUT SLOPED TUBE TO FIT TIGHTLY TO BOTTOM CHORD OF TRUSS WITH NO GAPS VISIBLE AFTER WELDING.

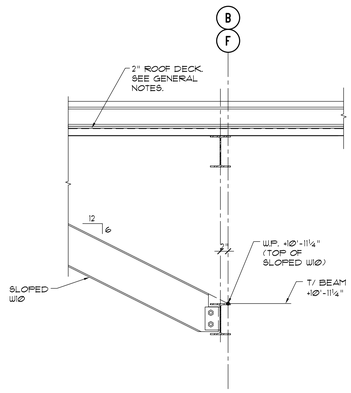

SECTION G
SCALE ¾" = 1'-0" — S2.4

JOHNSON&KING ENGINEERS
structural consultants
1223 Elmwood Avenue | 803.779.8830 T
Columbia, SC 29201 | 803.779.8831 F

The Boudreaux Group
Interdisciplinary Design. Architecture Interiors Planning
1200 Park Street (29201)
P.O. Box 9505
Columbia, SC 29290
803 799 0400 f
803 771 6844 f
info@boudreauxgroup.com

A/E Seal

SOUTH CAROLINA PROFESSIONAL ENGINEER No. 8736 RICHARD A. BRADLEY 9.26.14

A/E Seal

SOUTH CAROLINA JOHNSON & KING ENGINEERS No. C00165 CERTIFICATE OF AUTHORIZATION

Project Title
UNIVERSITY OF SOUTH CAROLINA
SCHOOL OF JOURNALISM
BROADCAST STUDIO
BID DOCUMENTS
COLUMBIA, SOUTH CAROLINA

Project No. U-646-12-3
Drawn By RWB
Checked By JLM
Date 10.31.14

The drawings, specifications and the arrangement of the architectural work represented thereby are and shall remain the property of The Boudreaux Group. They are not to be changed or used in any way without the permission of The Boudreaux Group, PA. The unauthorized use of these documents will be prosecuted to the fullest extent of the law. © 2014 The Boudreaux Group

Revisions

No.	Name	Date

Drawing Title
STRUCTURAL DETAILS

Drawing No.
S2.4

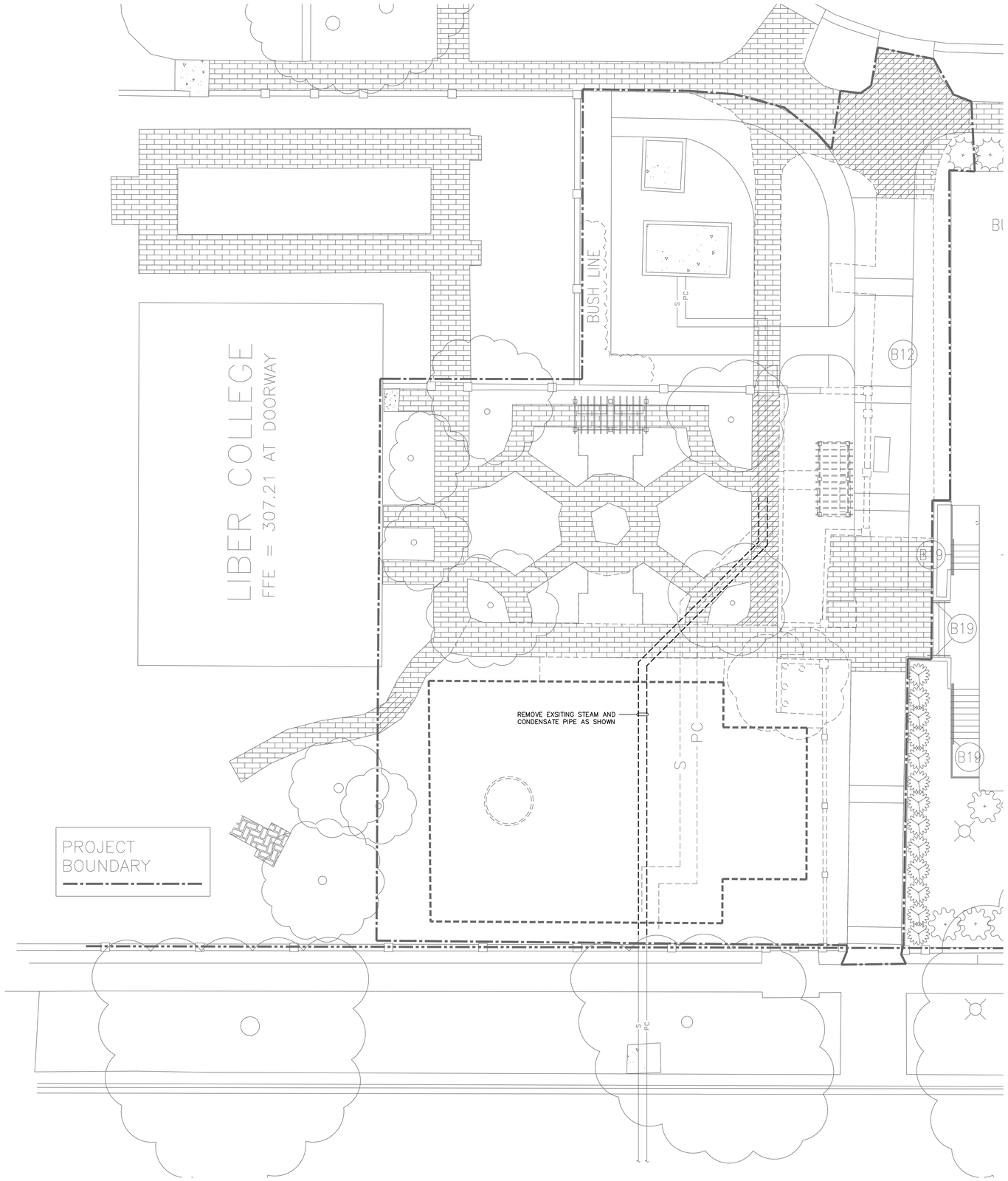

1 MSD1.1 DEMOLITION SITE PLAN
SCALE: 1/8" = 1'-0"

Swygert & Associates
CONSULTING ENGINEERS
DBA Swygert & Assoc., Ltd.
Post Office Box 11686
Columbia, S.C. 29211
Telephone: (803) 791-9300
Facsimile: (803) 791-0830
mail@swygert-associates.com

The Boudreaux Group
The Boudreaux Group, Inc.
1330 Lady St., Suite 500 (29201)
P.O. Box 5965
Columbia, SC 29250
803 799 0247 p
803 771 6844 f
info@boudreauxgroup.com
Interdisciplinary Design Architecture Interiors Planning

A/E Seal

A/E Seal

Project Title
UNIVERSITY OF SOUTH CAROLINA
SCHOOL OF JOURNALISM
BROADCAST STUDIO

BID DOCUMENTS
COLUMBIA, SOUTH CAROLINA

Project No.
U-646-12-3
Date
10.31.14
Drawn By
DEM
Checked By
WCL

This drawing and the design therein are the property of The Boudreaux Group, Inc. The reproduction, copying, or use of this drawing without the written consent of The Boudreaux Group, Inc. is prohibited and any infringement will be subject to legal action. Copyright © 2001 The Boudreaux Group

Revisions

No.	Name	Date

Drawing Title
DEMOLITION SITE PLAN

Drawing No.
MSD1.1

N:\PROJECTS\13240\DRAWINGS\HVAC\13240-MSD1_1.dwg

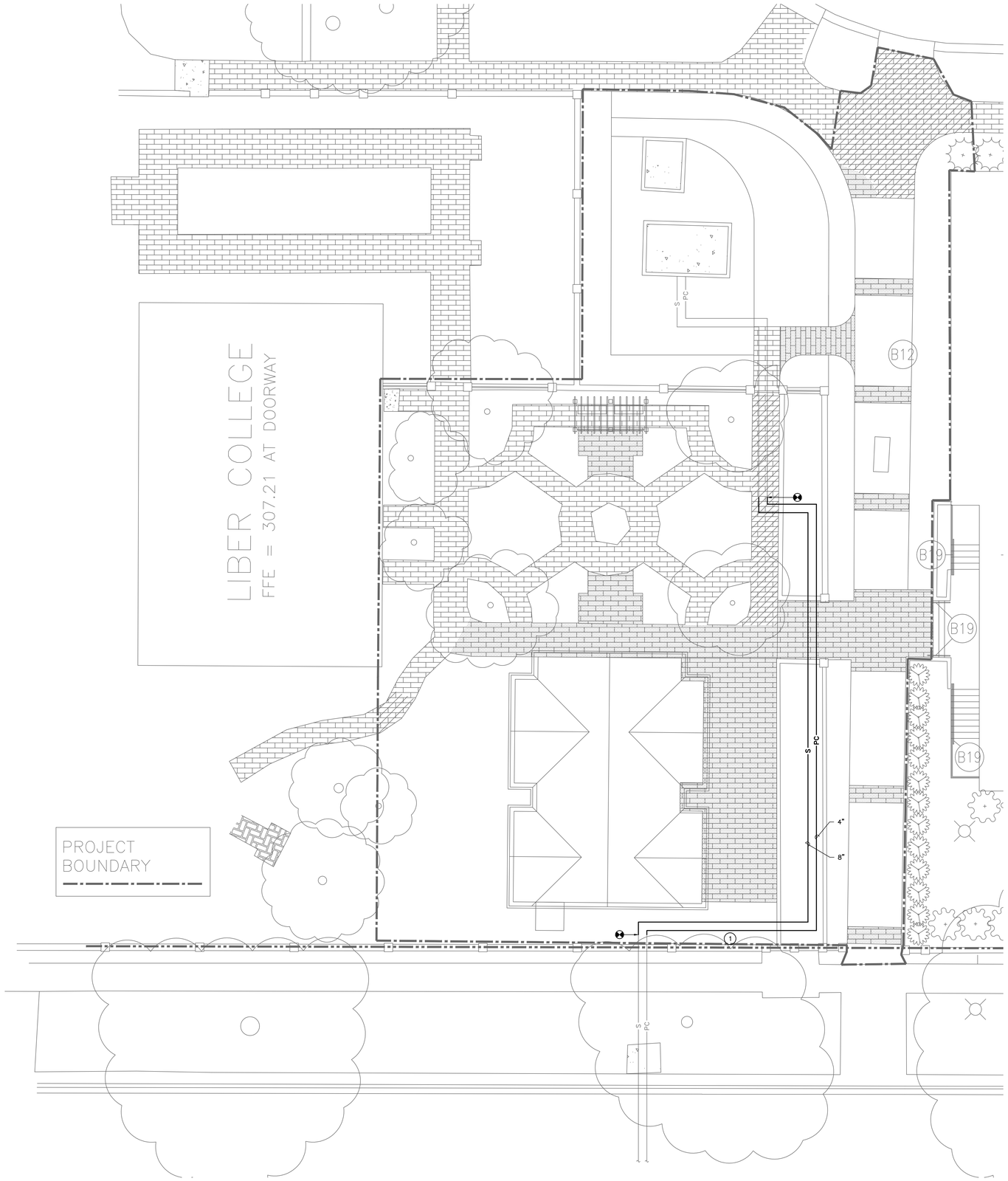

1 MS1.1 SITE PLAN
SCALE: 1/8" = 1'-0"

NOTES TO SHEET

1. CONTRACTOR SHALL SHORE UP EXISTING HISTORIC WALL TO PROTECT THE WALL AND FOUNDATION WHERE NEW TRENCH IS EXCAVATED FOR NEW PIPE ROUTING.

Swygert & Associates
CONSULTING ENGINEERS
DBA Swygert & Assoc., Ltd.
Post Office Box 11686
Columbia, S.C. 29211
Telephone: (803) 791-9300
Facsimile: (803) 791-0830
mail@swygert-associates.com

The Boudreaux Group
The Boudreaux Group, Inc.
1330 Lady St., Suite 500 (29201)
P.O. Box 5965
Columbia, SC 29250
803 799 0247 p
803 771 6844 f
info@boudreauxgroup.com
Interdisciplinary Design Architecture Interiors Planning

A/E Seal

A/E Seal

Project Title
UNIVERSITY OF SOUTH CAROLINA
SCHOOL OF JOURNALISM
BROADCAST STUDIO

BID DOCUMENTS
COLUMBIA, SOUTH CAROLINA

Project No. U-646-12-3
Date 10.31.14
Drawn By DEM
Checked By WCL

This drawing and the design therein are the property of The Boudreaux Group, Inc. The reproduction, copying, or use of this drawing without the written consent of The Boudreaux Group, Inc. is prohibited and any infringement will be subject to legal action. Copyright © 2001 The Boudreaux Group

Revisions

No.	Name	Date

Drawing Title
SITE PLAN

Drawing No.
MS1.1

N:\PROJECTS\13240\DRAWINGS\HVAC\13240-MS1_1.dwg

SPLIT SYSTEM HEAT PUMP SCHEDULE

TAG	TRANE MODEL AHU/SHP	COOLING CAP. MBH @ 80/67/95 TOTAL/SENSIBLE	HTG. CAP. MBH @ 47°F	AUX.H.T. KW	AIRFLOW CFM	OUTDOOR AIR CFM	ESP IN.W.G	INDOOR FAN H.P.	SEER/ HSPF	REMARKS
AHU-1/SHP-1	TAM4A0C60S/4TWA2060B	57.5/44.9	56.5	10.8	2,000	200	0.4	1	13.0/8.0	1,2,3

1. PROVIDE SINGLE POINT POWER CONNECTION AT AIR HANDLER, 7-DAY PROGRAMMABLE AUTOMATIC CHANGEOVER THERMOSTAT WITH BATTERY BACKUP, HAIL GUARD AND THERMAL EXPANSION VALVE.
2. INSTALL DUCT SMOKE DETECTOR WIRED TO SHUT DOWN THE UNIT.
3. PROVIDE AUXILIARY DRAIN PAN WITH FLOAT SWITCH WIRED TO SHUT DOWN THE UNIT IN CASE OF CONDENSATE OVERFLOW.

AIR DISTRIBUTION SCHEDULE

TAG	DESCRIPTION	MANUFACTURER	MODEL	FRAME	CFM	NECK SIZE	FACE SIZE	MAX NC	REMARKS
(A)	LINEAR BAR DIFFUSER	PRICE	15B	SURFACE	750	24"x12"	26"x14"	25	2,3
(B)	UNI-FLOW SUPPLY	PRICE	ASPD	LAY-IN	0-125	6"ø	24"x24"	25	1,2
(C)	UNI-FLOW SUPPLY	PRICE	ASPD	LAY-IN	251-350	10"ø	24"x24"	25	1,2
(D)	PERFORATED RETURN	PRICE	APDDR	LAY-IN	0-1000	22"x22"	24"x24"	25	1,2

1. PROVIDE WITH STANDARD WHITE FINISH.
2. PROVIDE ALUMINUM OR ALUMINIZED STEEL CONSTRUCTION.
3. PROVIDE WITH MILL FINISH.

EXHAUST FAN SCHEDULE

TAG	GREENHECK MODEL NO.	TYPE	CFM	ESP	MOTOR H.P./W	SONES (MAX.)	REMARKS
EF-1	SP-B110	CEILING	75	0.375	100W	1.0	1,3
EF-2	SP-B110	CEILING	75	0.375	100W	1.0	1,2

1. PROVIDE WITH CEILING GRILLE, BACKDRAFT DAMPER, DISCONNECT SWITCH, AND SPEED CONTROL MOUNTED ON FAN.
2. INTERLOCK WITH WALL SWITCH, PROVIDED AND WIRED BY ELECTRICAL CONTRACTOR.
3. INTERLOCK WITH LIGHT SWITCH, WIRED BY ELECTRICAL CONTRACTOR.

ZONE DAMPER SCHEDULE

TAG	RUSKIN MODEL	SIZE	MAX. CFM	MIN. CFM	REMARKS
ZD-1	ZCDRS25	16"ø	1550	1000	1,2,3
ZD-2	ZCDRS25	8"ø	450	100	1,2,3

1. PROVIDE ADJUSTABLE ROOM SENSOR AND ACTUATOR WITH DAMPER.
2. PROVIDE SEPERATE 120V/24V TRANSFORMER FOR EACH DAMPER. DIVISION 23 SHALL PROVIDE WIRING FROM 120V JUNCTION BOX PROVIDED BY DIVISION 26.
3. PROVIDE CONTROL PANEL TO OPERATE ALL ZONE DAMPERS, BYPASS DAMPER, AND DUCT MOUNTED TEMPERATURE AND PRESSURE SENSORS.

DESIGN CONDITIONS

SEASON	OUTSIDE	INSIDE
SUMMER	97° FDB / 78° FWB	75° FDB / 50% RH
WINTER	22° FDB	70° FDB

GENERAL NOTES

1. VISIT SITE PRIOR TO BIDDING. THIS CONTRACTOR SHALL DETERMINE DIFFICULTY OF INSTALLATION AND REFLECT THIS IN HIS BIDDING.
2. DO NOT SCALE DRAWINGS. SEE ARCHITECTURAL DRAWINGS AND REFLECTED CEILING PLANS FOR EXACT LOCATIONS OF DOORS, WINDOWS, AIR DISTRIBUTION, ETC.
3. ALL PIPING AND DUCTWORK LOCATIONS SHALL BE COORDINATED WITH WORK UNDER OTHER DIVISIONS OF THE SPECIFICATIONS TO AVOID INTERFERENCE.
4. ALL PIPING AND DUCTWORK INSULATION SHALL BE RUN CONTINUOUSLY THROUGH FLOORS, ROOFS AND PARTITIONS.
5. ALL MECHANICAL ITEMS EXTENDING THROUGH WALLS AND ROOF SHALL BE FLASHED AND COUNTERFLASHED.
6. ALL PIPING IS SHOWN DIAGRAMMATIC. HOWEVER, THIS CONTRACTOR SHALL PROVIDE ALL REQUIRED FITTINGS, PIPING AND INSULATION FOR ALL OFFSETS AND/OR CHANGES IN ELEVATION.
7. EXTEND ALL DRAIN LINES AS INDICATED – SO ROUTED AS TO AVOID INTERFERENCE WITH PASSAGEWAYS AND MAINTENANCE. DRAINS FROM AIR HANDLING UNITS SHALL BE TRAPPED PER STATIC PRESSURE REQUIREMENTS.
8. MINIMUM PIPE SIZE SHALL BE 3/4-INCH UNLESS INDICATED OTHERWISE.
9. ALL PIPING SHALL BE SUPPORTED IN ACCORDANCE WITH THE SPECIFICATIONS AND FURTHER SUPPORTS OR HANGERS SHALL BE PROVIDED TO PREVENT WEIGHT OF PIPING BEING PLACED ON EQUIPMENT.
10. ALL DUCTWORK SPECIFIED TO BE LINED SHALL BE INCREASED IN SIZE TO ALLOW FOR LINER.
11. MOTORIZED OUTSIDE AIR DAMPERS SHALL BE ABLE TO MODULATE AND ADJUST THE OPEN POSITION TO BALANCE THE OUTDOOR AIR TO THE SPECIFIED CFM.
12. ALL ITEMS OF EQUIPMENT ON GRADE SHALL BE LOCATED ON REINFORCED CONCRETE FOUNDATIONS, MINIMUM 6-INCH THICK OR AS DETAILED ON THESE PLANS AND SPECIFICATIONS AND 6 INCHES LARGER THAN EQUIPMENT IN EACH DIRECTION. PADS SHALL BE REINFORCED PER THE HOUSEKEEPING PAD SECTION OF THE ASHRAE PRACTICAL GUIDE FOR SEISMIC RESTRAINT. ALL UNITS SHALL BE SECURED TO THE HOUSEKEEPING PAD WITH SEISMIC RESTRAINTS. PROVIDE 1-INCH CHAMFERS ON ALL SIDES.
13. PROVIDE FOR ACCESS TO ALL EQUIPMENT REQUIRING CLEANING OR ADJUSTMENT.
14. INSTALL ALL VAV BOXES WITHIN 24" OF CEILING TO ALLOW FOR SERVICE ACCESS.
15. THIS CONTRACTOR SHALL PROVIDE ALL ITEMS OF MISCELLANEOUS STEEL AS REQUIRED FOR INSTALLATION OF ALL MECHANICAL ITEMS.
16. BLANK-OFF ALL UNUSED PORTIONS OF LOUVER (WHICH HAVE MECHANICAL DUCT CONNECTIONS) WITH 20 GAUGE GALVANIZED SHEET METAL. PROVIDE ONE-INCH RIGID INSULATION ON BACK OF BLANK-OFF AND COVER WITH 26 GAUGE GALVANIZED SHEET METAL.
17. THIS CONTRACTOR SHALL DO ALL CONTROL WIRING. DIVISION 26 WILL DO ALL POWER WIRING. ALL WIRING SHALL BE IN ACCORDANCE WITH NATIONAL ELECTRIC CODE. CONTROL WIRING SHALL BE CONCEALED WITHIN WALL AND ALL CONTROL WIRING SHALL BE ROUTED IN EMT CONDUIT. DUCT DETECTORS PROVIDED BY DIVISION 26 SHALL BE INSTALLED BY DIVISION 23. POWER WIRING AND FIRE ALARM CONNECTIONS SHALL BE BY DIVISION 26. CONTROL WIRING FOR UNIT SHUTDOWN SHALL BE BY DIVISION 23.
18. LOCATE ALL SPACE CONTROL INSTRUMENTS 4'-0" ABOVE FINISHED FLOOR.
19. CORRECT SETTINGS ON ALL BALANCING FITTINGS SHALL BE PERMANENTLY MARKED. PROVIDE ORANGE FLAGGING RIBBON ON EACH DAMPER HANDLE FOR EASY IDENTIFICATION.
20. THIS CONTRACTOR SHALL BE RESPONSIBLE FOR ANY NECESSARY DISMANTLING OF EQUIPMENT TO BE REMOVED. ITEMS REMOVED UNDER THIS CONTRACT SHALL BECOME THE PROPERTY OF THE CONTRACTOR AND SHALL BE DISPOSED OF PROPERLY.
21. THE HVAC SYSTEMS SHALL NOT BE OPERATED DURING HEAVY CONSTRUCTION OPERATIONS INCLUDING MASONRY, GYPSUM BOARD SANDING, HEAVY CLEANUP ACTIVITIES, OR OTHER ACTIVITIES THAT CREATE AIRBORNE PARTICLES OR DEBRIS. ALL SYSTEMS SHALL BE CLEAN OF CONSTRUCTION DEBRIS, DUST AND DIRT AT FINAL COMPLETION. DUCT CLEANING AND UNIT/COIL CLEANING SHALL BE PERFORMED IF REQUIRED.

LEGEND

SYMBOL	DESCRIPTION
S	HIGH PRESSURE STEAM
PC	PUMPED CONDENSATE
	EXISTING PIPE
	PIPE TO BE REMOVED
R	REFRIGERANT LINES
D	DRAIN LINE
	SHUTOFF VALVE
	PIPE TURNS TO, AWAY
(A)100	TYPE "A" DIFFUSER, 100 CFM
(T)	THERMOSTAT
(H)	RELATIVE HUMIDITY SENSOR
MBD	MANUAL OPPOSED BLADE BALANCING DAMPER
MOD	MOTOR OPERATED OPPOSED BLADE DAMPER
	RECTANGULAR SUPPLY DUCTWORK
	RETURN, EXHAUST, FRESH AIR DUCTWORK
48x24	48"x24" RECTANGULAR DUCT
	CONNECTION POINT OF NEW TO EXISTING

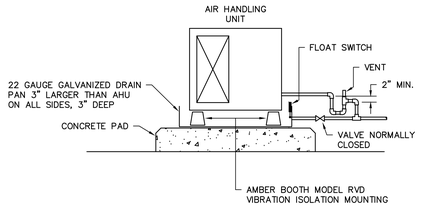

ATTIC AIR HANDLING UNIT SUPPORT DETAIL

NO SCALE

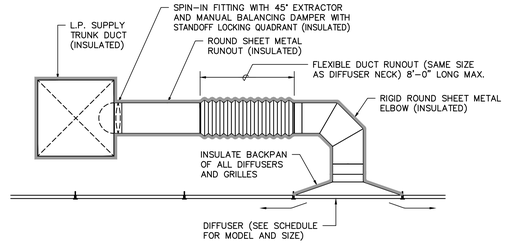

CEILING DIFFUSER DETAIL

NO SCALE

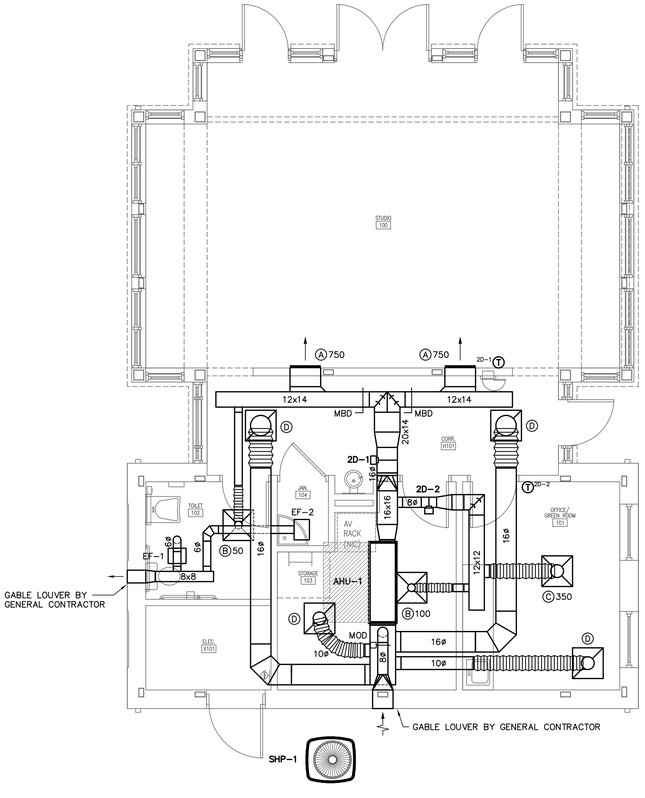

1 M1.1 FLOOR PLAN

SCALE: 1/4" = 1'-0"

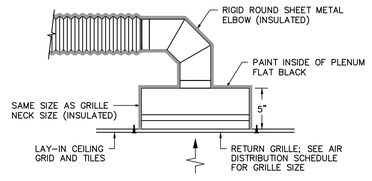

RETURN GRILLE DETAIL

NO SCALE

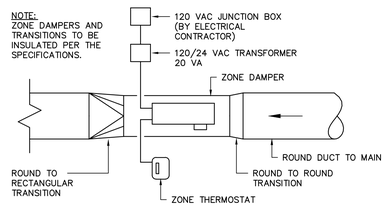

ZONE DAMPER DETAIL

NO SCALE

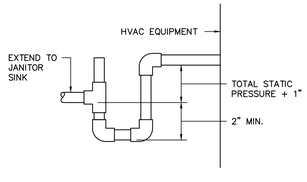

CONDENSATE DRAIN DETAIL

NO SCALE

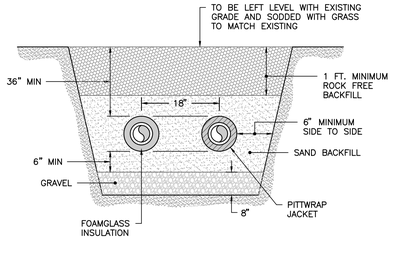

BACKFILL DETAIL

NO SCALE

Swygert & Associates
CONSULTING ENGINEERS
DBA Swygert & Assoc., Ltd.
Post Office Box 11686
Columbia, S.C. 29211
Telephone: (803) 791-9300
Facsimile: (803) 791-0830
mail@swygert-associates.com

The Boudreaux Group
The Boudreaux Group, Inc.
1330 Lady St., Suite 500 (29201)
P.O. Box 5905
Columbia, SC 29250
803 790 0241 /
803 771 6844 /
info@boudreauxgroup.com
Interdisciplinary Design Architecture Interiors Planning

A/E Seal

A/E Seal

Project Title
UNIVERSITY OF SOUTH CAROLINA
SCHOOL OF JOURNALISM
BROADCAST STUDIO
BID DOCUMENTS
COLUMBIA, SOUTH CAROLINA

Project No. 146-12-3
Date 10.31.14
Drawn By DEM
Checked By MKS

This drawing, as an instrument of service, is and shall remain the property of The Boudreaux Group. No part hereof shall be copied, disclosed to others or used in connection with any work or project other than the specific project for which it has been prepared by The Boudreaux Group.

Revisions

No.	Name	Date

Drawing Title
FLOOR PLAN, DETAILS, NOTES, SCHEDULES, AND LEGEND

Drawing No.
M1.1

N:\PROJECTS\13240\DRAWINGS\HVAC\13240-M1_1.dwg

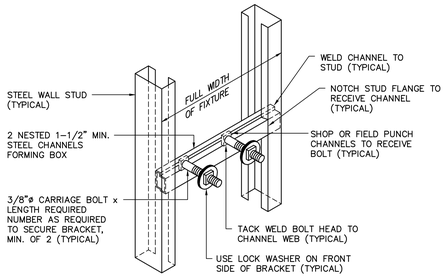

CHANNEL BACK–UP ASSEMBLY

NO SCALE

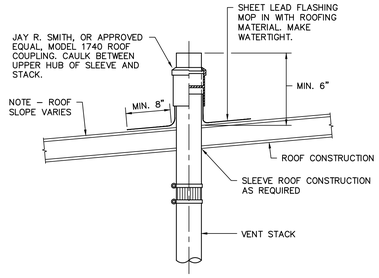

VENT THROUGH ROOF DETAIL

NO SCALE

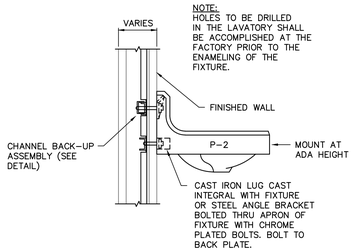

LAVATORY MOUNTING DETAIL

NO SCALE

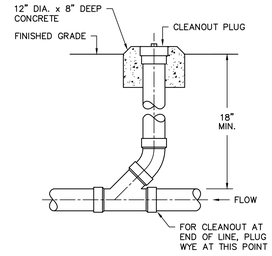

GRADE CLEANOUT DETAIL

NO SCALE

PLUMBING FIXTURE SCHEDULE

P. NO.	FIXTURE	MFGR.	NAME	MFGRS. NO.	SIZE	MIN. SUPPLY CW	MIN. SUPPLY HW	REMARKS
P–1	ACCESSIBLE WATER CLOSET	KOHLER	HIGHLINE CLASSIC	K–3519	– – –	3/8"	– –	WITH BENEKE 527 SEAT, McGUIRE H166 3/8" CAST BRASS SUPPLY WITH STOP, AND BOLT CAPS.
P–2	LAVATORY	KOHLER	KINGSTON	K–2005	21¼"x18⅛"	3/8"	3/8"	WITH DELTA MODEL 501LF–HDF FAUCET, McGUIRE 155A GRID DRAIN, McGUIRE H165 3/8" CAST BRASS SUPPLIES WITH STOPS, AND McGUIRE 8872 1–1/4" P–TRAP. MOUNT PER ADA REQUIREMENTS.
P–3	SINK	ELKAY	LUSTERTONE	LRAD–2219–65	22"x19½"	1/2"	1/2"	WITH SPEAKMAN MODEL SC–3004–LD FAUCET, LK–35 CUP STRAINER, McGUIRE H2167 1/2" CAST BRASS SUPPLIES WITH STOPS, AND McGUIRE 8912 1–1/2" P–TRAP.
P–4	JANITOR'S SINK	STERN WILLIAMS	HILOW	HL–1800–BP	24"x24"	1/2"	1/2"	WITH SPEAKMAN MODEL SC–5811–RCP FAUCET, STAINLESS STEEL GRID DRAIN, AND STAINLESS STEEL BACK PANELS.
P–5	ELECTRIC WATER COOLER	OASIS	AQUA POINTE	M8WREBF	– – –	3/8"	– –	WITH STAINLESS STEEL FINISH, BOTTLE FILLER, McGUIRE H165 3/8" CAST BRASS SUPPLY WITH STOP, AND McGUIRE 8872 1–1/4" P–TRAP. MOUNT PER ADA REQUIREMENTS.
P–6	WALL HYDRANT	WOODFORD	– – –	MODEL 67	– – –	3/4"	– –	LOOSE KEY. PROVIDE KEY TO OWNER. MOUNTED AT 2'–0" ABOVE FINISHED GRADE.
WH–1	WATER HEATER	STATE	SELECT JUNIOR	ES6–20–SOMS	19 GALLONS	3/4"	3/4"	WITH 1650W INPUT @ 120 VOLTS. SEE ELECTRICAL DRAWINGS FOR ELECTRICAL CHARACTERISTICS.

NOTE: SEE ARCHITECTURAL DRAWINGS FOR MOUNTING HEIGHTS OF ALL WALL MOUNTED FIXTURES.

GENERAL NOTES

1. ALL WORK SHALL BE PERFORMED ACCORDING TO ALL LOCAL, STATE, NATIONAL CODES, AND THE 2012 INTERNATIONAL PLUMBING CODE.
2. SEE SITE PLAN FOR CONTINUATION OF UTILITIES.
3. ALL CONNECTIONS WITH SITE AT 5'–0" FROM BUILDING SHALL BE MADE BY THIS CONTRACTOR. THIS CONTRACTOR SHALL ALSO PROVIDE ALL NECESSARY TRANSITIONS IN PIPE SIZE AND/OR MATERIALS.
4. DO NOT SCALE DRAWINGS. SEE ARCHITECTURAL DRAWINGS FOR EXACT DIMENSIONS, FIXTURE LOCATIONS, ETC.
5. EXCEPT WHERE PIPE SPACE IS PROVIDED OR UNLESS NOTED OTHERWISE, ALL SUPPLY, WASTE AND VENT RISERS SHALL BE RUN IN WALLS AND PARTITIONS.
6. VENTS SHALL BE COLLECTED ABOVE THE CEILING AND EXTENDED THROUGH THE ROOF AS A SINGLE VENT AS INDICATED.
7. COORDINATE CLOSELY WITH ALL WORK DONE UNDER OTHER DIVISIONS OF THE SPECIFICATIONS TO AVOID INTERFERENCE AND CONFLICT.
8. PROVIDE FOR ACCESS TO ALL EQUIPMENT REQUIRING CLEANING OR ADJUSTMENT.
9. LOCATE ALL EXTERIOR WALL HYDRANTS 2'–0" ABOVE FINISHED GRADE.
10. ALL VALVES WITH THREADED HOSE CONNECTIONS AND WALL HYDRANTS SHALL BE EQUIPPED WITH A WATTS REGULATOR COMPANY, NO. NF8 BACK–SIPHONAGE, BACKFLOW PREVENTER.
11. EXPOSED WASTE AND WATER PIPING UNDER LAVATORIES MARKED "ADA" SHALL BE INSULATED WITH HANDI LAV–GUARD KIT MODEL NUMBER 102W AS MANUFACTURED BY TRUEBRO, INC., OR APPROVED EQUAL.
12. ALL PIPING INSULATION SHALL BE RUN CONTINUOUSLY.

LEGEND

SYMBOL	DESCRIPTION
	SANITARY WASTE LINE
	SANITARY VENT LINE
	DOMESTIC COLD WATER LINE
	DOMESTIC HOT WATER LINE
	SHUTOFF VALVE
	PIPE TURNS TO, AWAY
GCO	GRADE CLEANOUT
P–6	WALL HYDRANT
ADA	FIXTURE FOR USE ACCORDING TO THE AMERICANS WITH DISABILITIES ACT
VTR	VENT THROUGH ROOF

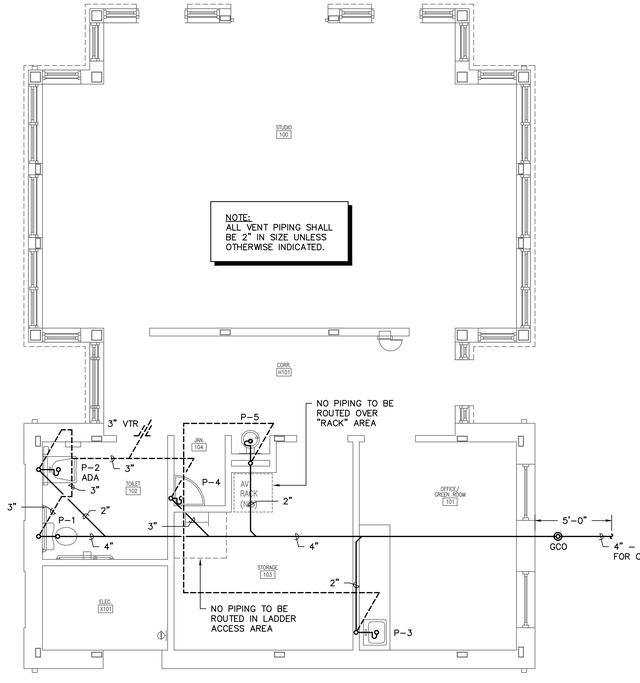

WASTE AND VENT PIPING
FLOOR PLAN
1 / P1.1
SCALE: 1/4" = 1'–0"

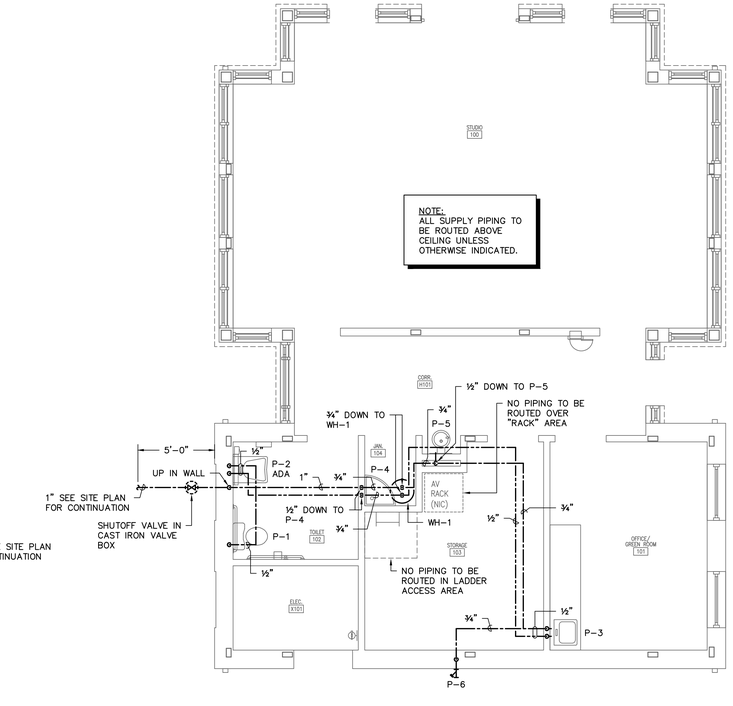

SUPPLY PIPING
FLOOR PLAN
2 / P1.1
SCALE: 1/4" = 1'–0"

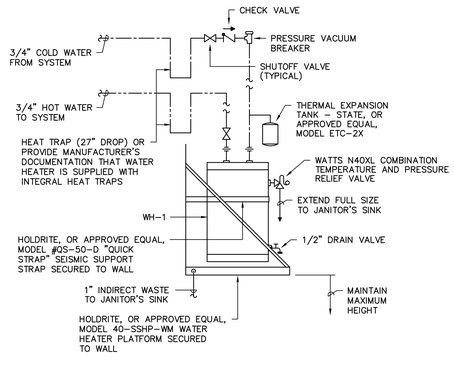

WATER HEATER PIPING DETAIL

NO SCALE

Swygert & Associates
CONSULTING ENGINEERS
DBA Swygert & Assoc., Ltd.
Post Office Box 11686
Columbia, S.C. 29211
Telephone: (803) 791–9300
Facsimile: (803) 791–0830
mail@swygert–associates.com

The Boudreaux Group
Interdisciplinary Design Architecture Interiors Planning
The Boudreaux Group, Inc.
1330 Lady St., Suite 500 (29201)
P.O. Box 5905
Columbia, SC 29250
803 799 0221 P
803 771 6844 F
info@theboudreauxgroup.com

A/E Seal

A/E Seal

Project Title
UNIVERSITY OF SOUTH CAROLINA
SCHOOL OF JOURNALISM
BROADCAST STUDIO
BID DOCUMENTS
COLUMBIA, SOUTH CAROLINA

Project No. 13-46-12-3
Date 10.31.14
Drawn By DEM
Checked By TWS

This drawing and the design thereon are the property of The Boudreaux Group, Inc. Any reproduction, modification, or use without the prior written consent of The Boudreaux Group, Inc. is prohibited. All infringement will be subject to legal action to the fullest extent by The Boudreaux Group.

Revisions		
No.	Name	Date

Drawing Title
FLOOR PLANS, DETAILS, NOTES, SCHEDULE, AND LEGEND

Drawing No.
P1.1

N:\PROJECTS\13240\DRAWINGS\PLUM\13240-P1_1.dwg

ELECTRICAL SYMBOL LEGEND

Symbol	Description
C 12	LIGHTING FIXTURES (SEE LIGHTING FIXTURE SCHEDULE) (ALPHANUMERIC DENOTES TYPE, NUMBER DENOTES CIRCUIT)
	LIGHTING FIXTURES WITH EMERGENCY BATTERY PACK BACKUP
	EXIT SIGN, SINGLE FACE, CEILING MOUNTED, WITH BATTERY PACK
Sb	SINGLE POLE SWITCH, FLUSH MOUNTED IN WALL AT 48" AFF T.O.B. (LETTER DENOTES SWITCHLEG)
S3	THREE WAY SWITCH FLUSH MOUNTED IN WALL AT 48" AFF T.O.B.
SD	DIMMER SWITCH FLUSH MOUNTED IN WALL AT 48" AFF T.O.B.
SP	SWITCH WITH PILOT LIGHT FLUSH MOUNTED IN WALL AT 48" AFF T.O.B.
	DUAL-TECHNOLOGY OCCUPANCY SENSOR (WATTSTOPPER # DT-200/BZ-50 OR APPROVED EQUAL) WITH SWITCH, WALL MOUNTED 48" AFF (TOP OF BOX)
	DUAL-TECHNOLOGY OCCUPANCY SENSOR (WATTSTOPPER# DT-200/BZ-50 OR APPROVED EQUAL), WITH MULTIPLE SWITCHES, WALL MOUNTED 48" AFF (TOP OF BOX)
12	20 AMP DUPLEX RECEPTACLE, FLUSH MOUNTED IN WALL AT 18" AFF (NUMBER DENOTES CIRCUIT)
GFI WP	20 AMP DUPLEX RECEPTACLE, FLUSH MOUNTED IN WALL AT 42" AFF OR 6" ABOVE COUNTER BACKSPLASH (GFI = GROUND FAULT INTERRUPTER; WP = WEATHERPROOF METALLIC "IN-USE" TYPE COVER)
	20 AMP DOUBLE DUPLEX RECEPTACLE, FLUSH MOUNTED IN WALL AT 18" AFF UNLESS NOTED OTHERWISE.
	20 AMP DUPLEX RECEPTACLE, FLUSH MOUNTED IN CEILING
	20 AMP DUPLEX RECEPTACLE, MOUNTED IN FLOOR BOX (FLUSH WITH FLOOR) (WIREMOLD EVOLUTION SERIES OR APPROVED EQUAL)
	VOICE/DATA J-BOX, FLUSH MOUNTED IN WALL AT 18" AFF UNLESS NOTED OTHERWISE. PROVIDE A 4" SQUARE x 2" DEEP STEEL BOX WITH SINGLE-GANG PLASTER RING AND BLANK PLASTIC/PHENOLIC WALLPLATE. PROVIDE ONE 1" EMT RACEWAY WITH PULL STRING FROM BOX TO SPACE ABOVE DROP CEILING. TURN A 90 DEGREE BEND IN RACEWAY ABOVE DROP CEILING AND TURN TOWARD MAIN COMMUNICATION ROOM. PROVIDE A PLASTIC BUSHING ON BOTH ENDS OF RACEWAY.
	VOICE/DATA J-BOX, FLUSH MOUNTED IN WALL AT 42" AFF OR 6" ABOVE COUNTER BACKSPLASH UNLESS NOTED OTHERWISE. PROVIDE A 4" SQUARE x 2" DEEP STEEL BOX WITH SINGLE-GANG PLASTER RING AND BLANK PLASTIC/PHENOLIC WALLPLATE. PROVIDE ONE 1" EMT RACEWAY WITH PULL STRING FROM BOX TO SPACE ABOVE DROP CEILING. TURN A 90 DEGREE BEND IN RACEWAY ABOVE DROP CEILING AND TURN TOWARD MAIN COMMUNICATION ROOM. PROVIDE A PLASTIC BUSHING ON BOTH ENDS OF RACEWAY.
WIFI	VOICE/DATA J-BOX, FLUSH MOUNTED IN CEILING OR ABOVE CEILING. PROVIDE A 4" SQUARE x 2" DEEP STEEL BOX WITH SINGLE-GANG PLASTER RING AND BLANK PLASTIC/PHENOLIC WALLPLATE. PROVIDE ONE 1" EMT RACEWAY WITH PULL STRING FROM BOX TO SPACE ABOVE DROP CEILING. TURN A 90 DEGREE BEND IN RACEWAY ABOVE DROP CEILING AND TURN TOWARD MAIN COMMUNICATION ROOM. PROVIDE A PLASTIC BUSHING ON BOTH ENDS OF RACEWAY.
	FLOOR BOX, MULTI-SERVICE, FLUSH MOUNTED IN FLOOR (STEEL CITY# AFM-6 OR APPROVED EQUAL) PROVIDE ONE 20 AMP DUPLEX RECEPTACLE IN BOX. PROVIDE TWO SEPARATE CONDUITS (ONE POWER AND ONE VOICE/DATA) TO BOX.
J	JUNCTION BOX, FLUSH MOUNTED IN WALL AT 18" AFF UNLESS NOTED OTHERWISE (FUNCTION AS INDICATED ON PLAN)
J	JUNCTION BOX, FLUSH MOUNTED IN CEILING OR MOUNTED ABOVE CEILING (FUNCTION AS INDICATED ON PLAN) ("V/D" DENOTES VOICE/DATA, "P" DENOTES POWER)
J	JUNCTION BOX, FLUSH MOUNTED IN FLOOR (FUNCTION AS INDICATED ON PLAN)
	ELECTRICAL PANELBOARDS, SURFACE AND FLUSH MOUNTED RESPECTIVELY
2	ELECTRICAL SAFETY DISCONNECT SWITCH. PROVIDE SWITCH WITH RATINGS WITH RATINGS AS INDICATED IN THE DISCONNECT SWITCH SCHEDULE SHOWN ON THIS SHEET. SURFACE MOUNT SWITCH ON WALL AT LOCATION WHERE SWITCH HAS PROPER CLEARANCE IN ACCORDANCE WITH NEC.
17	CONDUCTOR/CONDUIT NOTATION (SEE SCHEDULE ON THIS SHEET)
	ELECTRICAL CONNECTION TO A MOTOR OR TO MOTOR-DRIVEN EQUIPMENT
F	FIRE ALARM MANUAL PULL STATION, SEMI-FLUSH MOUNT IN WALL AT 48" AFF T.OB.
V	FIRE ALARM VISIBLE-ONLY (STROBE) INDICATING DEVICE, SEMI-FLUSH MOUNTED IN CEILING (NUMBER INDICATES MINIMUM CANDELA RATING)
V 15cd	FIRE ALARM VISIBLE-ONLY (STROBE) INDICATING DEVICE, SEMI-FLUSH MOUNTED IN WALL AT 80" AFF (NUMBER INDICATES MINIMUM CANDELA RATING)
A/V	FIRE ALARM HORN/STROBE INDICATING DEVICE, SEMI-FLUSH MOUNTED IN CEILING (NUMBER INDICATES MINIMUM CANDELA RATING)
F WP 15cd	FIRE ALARM HORN/STROBE INDICATING DEVICE, SEMI-FLUSH MOUNTED IN WALL AT 80" AFF (WP = WEATHERPROOF RATED; NUMBER INDICATES MINIMUM CANDELA RATING)
A	FIRE ALARM HORN-ONLY (STROBE) INDICATING DEVICE, SEMI-FLUSH MOUNTED IN CEILING
A	FIRE ALARM HORN-ONLY (STROBE) INDICATING DEVICE, SEMI-FLUSH MOUNTED IN WALL AT 80" AFF
S	PHOTOELECTRIC SPOT-TYPE SMOKE DETECTOR. SEMI-FLUSH MOUNT DETECTOR IN CEILING.
S	PHOTOELECTRIC SPOT-TYPE SMOKE DETECTOR. WALL MOUNTED IN ELEVATOR PIT.
H	135 DEGREE SPOT-TYPE HEAT DETECTOR, FIXED TEMPERATURE. SEMI-FLUSH MOUNT DETECTOR IN CEILING.
H	135 DEGREE SPOT-TYPE HEAT DETECTOR, FIXED TEMPERATURE, WALL MOUNTED IN ELEVATOR PIT.
D	DUCT TYPE SMOKE DETECTOR.
T	DUCT DETECTOR TEST STATION, WALL MOUNTED 54" AFF.
F	SPRINKLER SYSTEM FLOW SWITCH.
T	SPRINKLER VALVE TAMPER SWITCH.
P	SPRINKLER SYSTEM PRESSURE SWITCH.
AIU	ADDRESSABLE INTERFACE UNIT, CONTROL OR MONITOR TYPE AS APPLICABLE, MOUNT IN NEMA 1 ENCLOSURE.
PIV	POST-INDICATING VALVE.
	CONTROL PANELS (SYSTEM AS INDICATED), SURFACE AND FLUSH MOUNTED RESPECTIVELY.
SD	FIRE ALARM SMOKE DAMPER
R	CARD READER, SEMI-FLUSH MOUNTED IN WALL AT 48" T.O.B. UNLESS NOTED OTHERWISE.
K	SECURITY SYSTEM KEYPAD, SEMI-FLUSH MOUNTED IN WALL AT 48" T.O.B. UNLESS NOTED OTHERWISE.
	SECURITY CAMERA JUNCTION BOX, MOUNTED 90" AFF
	A/V J-BOX, WALL MOUNTED (SEE "EAV" DRAWINGS FOR TYPE, MOUNTING HEIGHT, AND RELATED CONDUITS)
A/V	A/V J-BOX, CEILING MOUNTED (SEE "EAV" DRAWINGS FOR TYPE AND RELATED CONDUITS)

MOUNTING HEIGHTS INDICATED IN THIS LEGEND SHALL BE TO CENTERLINE OF DEVICE BOX. ALL SWITCHES AND PULL STATIONS SHALL BE INSTALLED TO BE 48" AFF TO TOP OF BOX. UNLESS NOTED OTHERWISE.

GENERAL NOTES

1. ELECTRICAL LAYOUT DRAWINGS ARE DIAGRAMMATIC. COORDINATE ALL WORK WITH ARCHITECTURAL, CIVIL, STRUCTURAL, MECHANICAL AND SECURITY CONTRACT DOCUMENTS.
2. INSTALL THE ELECTRICAL SYSTEM WITHOUT INTERFERING W/ DUCTS, PIPES, STRUCTURAL STEEL, OR OTHER SYSTEMS.
3. LOCATE LIGHTING FIXTURES SYMMETRICALLY IN THE PROPER RELATION TO FINISHED AREAS, EXCEPT WHERE DIMENSIONED ON DRAWINGS OR LOCATED ON REFLECTED CEILING PLANS.
4. PROVIDE ADDITIONAL SUPPORTS FOR PANELBOARDS, SWITCHES, STARTERS, RACEWAYS, AND OTHER ELECTRICAL EQUIPMENT WHEREVER THE BUILDING STRUCTURE IS NOT SUITABLE FOR DIRECT MOUNTING.
5. MOUNT GROUPED DEVICES IN A SINGLE CONTINUOUS MULTI-GANG BOX.
6. MINIMUM SIZES FOR WIRE AND CONDUIT ARE INDICATED ON THE PANELBOARD SCHEDULES FOR EACH BRANCH AND FEEDER CIRCUIT. WHERE BRANCH CIRCUIT WIRING IS NOT INDICATED ON PLAN, THE ARRANGEMENT, GROUPING, AND ROUTING OF THESE CIRCUITS SHALL BE PROVIDED BY THE CONTRACTOR IN ACCORDANCE WITH THE NATIONAL ELECTRICAL CODE, & LOCAL ORDINANCES.
7. EMT FITTINGS SHALL BE OF THE COMPRESSION TYPE. SET-SCREW OR INDENTOR TYPE FITTINGS SHALL NOT BE USED. MC CABLES MAY BE USED IN WALLS. ALL HOMERUNS SHALL BE EMT.
8. OUTLETS WHICH OCCUR ON OPPOSITE SIDES OF A COMMON WALL SHALL BE OFFSET A MINIMUM OF 6 INCHES (INCLUDING FIRE RATED WALLS).
9. LOCATE SMOKE DETECTORS A MINIMUM OF 36 INCHES FROM HVAC DIFFUSERS.
10. ELECTRICAL CONTRACTOR SHALL FURNISH DUCT MOUNTED SMOKE DETECTORS. MECHANICAL CONTRACTOR SHALL INSTALL DETECTORS AND PROVIDE FAN SHUTDOWN. ELECTRICAL CONTRACTOR SHALL CONNECT TO FIRE ALARM CONTROL PANEL. PROVIDE TEST STATION FOR EACH DUCT SMOKE DETECTOR (COORDINATE LOCATION WITH ARCHITECT AND ENGINEER). PROVIDE PLASTIC ENGRAVED LABEL (EXAMPLE: "AHU-2 DUCT SMOKE DETECTOR").
11. PROVIDE ALL REQUIRED TAMPER AND FLOW SWITCHES AS INDICATED ON SPRINKLER SYSTEM SHOP DRAWINGS.
12. ALL SWITCHES, FIRE ALARM PULL STATIONS, AND OTHER FUNCTIONAL WALL MOUNTED DEVICES SHALL BE MOUNTED 48" TO TOP OF DEVICE BOX. COORDINATE WITH STOREFRONT CONTRACTOR.
13. PROVIDE WHITE HOUSINGS WITH RED LETTERS ON ALL FIRE ALARM INDICATING DEVICES, EXCEPT PROVIDE RED HOUSINGS WITH WHITE LETTERS ON EXTERIOR AND INTERIOR BRICK WALLS.
14. DEVICES LOCATED IN GRID CEILINGS SHALL BE MOUNTED IN CENTER OF TILE.
15. ALL FLOOR BOX ASSEMBLIES SHALL HAVE METALLIC COVERS AND TRIM. FLUSH WITH FINISHED FLOOR.

ELECTRICAL ABBREVATIONS

AFF	ABOVE FINISHED FLOOR
AFG	ABOVE FINISHED GRADE
AHU	AIR HANDLING UNIT
AIU	ADDRESSABLE INTERFACE UNIT
BEC	BY ELECTRICAL CONTRACTOR
B.O.B.	BOTTOM OF BOX
C	CONDUIT
CU	COPPER
ELEV	ELEVATOR
EMT	ELECTRIC METALLIC TUBING
EWC	ELECTRIC WATER COOLER
FACP	FIRE ALARM CONTROL PANEL
FS	FAUCET SENSOR
GFI	GROUND FAULT INTERRUPT
J-BOX	JUNCTION BOX
LTG	LIGHTING
MB	MAIN BREAKER
MLO	MAIN LUGS ONLY
NEC	NATIONAL ELECTRICAL CODE
NF	NON-FUSIBLE
NIC	NOT IN CONTRACT
PRTR	PRINTER
REF	REFRIGERATOR
RTGP	ROOF TOP GAS PACK
RTU	ROOF TOP AIR HANDLING UNIT
SW	SWITCH
T.O.B.	TOP OF BOX
UC	UNDERCOUNTER
UTP	UNSHIELDED TWISTED PAIR
VAV	VARIABLE AIR VOLUME BOX
WAP	WIRELESS ACCESS POINT
WP	WEATHERPROOF

DISCONNECT SWITCH SCHEDULE

ID	AMPS	POLES	VOLTAGE	NEMA ENCLOSURE
1	30	2	208V	1
2	60	3	208V	1
3	60	3	208V	3R

ALL SWITCHES SHALL BE GENERAL DUTY TYPE, FUSIBLE UNLESS NOTED WITH "NF" (NON-FUSIBLE)

M — DENOTES DISCONNECT SWITCH INTEGRAL WITH MECHANICAL EQUIPMENT.

WIRE/CONDUIT SCHEDULE

ID	WIRE	CONDUIT
1	2#12, 1#12 GND.	3/4"
2	3#12, 1#12 GND.	3/4"
3	4#12, 1#12 GND.	3/4"
4	2#10, 1#10 GND.	3/4"
5	3#10, 1#10 GND.	3/4"
6	4#10, 1#10 GND.	3/4"
7	2#8, 1#10 GND.	3/4"
8	3#8, 1#10 GND	1"
9	4#8, 1#10 GND.	1"
10	3#6, 1#8 GND.	1"
11	4#6, 1#8 GND.	1-1/4"
12	3#4, 1#8 GND.	1-1/4"
13	4#4, 1#8 GND.	1-1/4"
14	3#3, 1#8 GND.	1-1/4"
15	4#3, 1#8 GND.	1-1/2"
16	3#2, 1#6 GND.	1-1/2"
17	4#2, 1#6 GND.	1-1/2"
18	3#1, 1#6 GND.	1-1/2"
19	4#1, 1#6 GND.	2"
20	3 #1/0, 1#6 GND.	2"
21	4 #1/0, 1#6 GND.	2"
22	3 #2/0, 1#6 GND.	2"
23	4 #2/0, 1#6 GND.	2"
24	3 #3/0, 1#6 GND.	2"
25	4 #3/0, 1#6 GND.	2-1/2"
26	3 #4/0, 1#4 GND.	2-1/2"
27	4 #4/0, 1#4 GND.	2-1/2"
28	3-250KCMil, 1#4 GND.	2-1/2"
29	4-250KCMil, 1#4 GND.	3"
30	3-350KCMil, 1#3 GND.	3"
31	4-350KCMil, 1#3 GND.	3"
32	3-500KCMil, 1#3 GND.	3"
33	4-500KCMil, 1#3 GND.	4"
34	3-600KCMil, 1#2 GND.	3-1/2"
35	4-600KCMil, 1#2 GND.	4"
36	3-750KCMil, 1#2 GND.	4"
37	4-750KCMil, 1#2 GND.	5"

ALL OTHER CIRCUITS SHALL BE 2#12, 1#12 GND., 3/4"C., UNLESS NOTED.

SYSTEMS GENERAL NOTE

INTRUSION DETECTION, ACCESS CONTROL, AUDIO/VISUAL, INTERCOM, AND TV PRODUCTION SYSTEMS SHALL BE DESIGNED AND INSTALLED BY OTHERS. THE ELECTRICAL CONTRACTOR SHALL BE RESPONSIBLE FOR PROVIDING INFRASTRUCTURE FOR ALL SYSTEM COMPONENTS. CONTRACTOR SHALL COORDINATE WITH OWNER'S VENDOR FOR REQUIREMENTS.

ELECTRICAL DRAWING INDEX

E0.1	ELECTRICAL SYMBOL LEGEND & SCHEDULES
E0.2	ELECTRICAL SITE PLANS
E1.1	LIGHTING PLAN
E1.2	POWER PLAN
E1.3	SYSTEMS PLAN

AB21310
BELKA ENGINEERING ASSOCIATES, INC.
7 CLUSTERS COURT, SUITE 201
COLUMBIA, SOUTH CAROLINA 29210
(803) 731-0650 fax (803) 731-2880
EMAIL: CEStringfield@bellsouth.net

The Boudreaux Group
The Boudreaux Group, Inc.
1330 Lady St., Suite 500 (29201)
P.O. Box 5695
Columbia, SC 29250
803 799 0247 p
803 771 6844 f
info@boudreauxgroup.com
Interdisciplinary Design Architecture Interiors Planning

A/E Seal
SOUTH CAROLINA BELKA ENGINEERING ASSOC. INC. No. C00953 CERTIFICATE OF AUTHORIZATION

A/E Seal
SOUTH CAROLINA LICENSED PROFESSIONAL ENGINEER No. 26181 10-1-14 JASON L. AREHEART

Project Title
UNIVERSITY OF SOUTH CAROLINA
SCHOOL OF JOURNALISM
BROADCAST STUDIO

BID DOCUMENTS
COLUMBIA, SOUTH CAROLINA

Project No. U-646-12-3
Drawn By JJS
Checked By CES
Date 10.31.14

Revisions | No. | Name | Date

Drawing Title
ELECTRICAL SYMBOL LEGEND & SCHEDULES

Drawing No.
E0.1

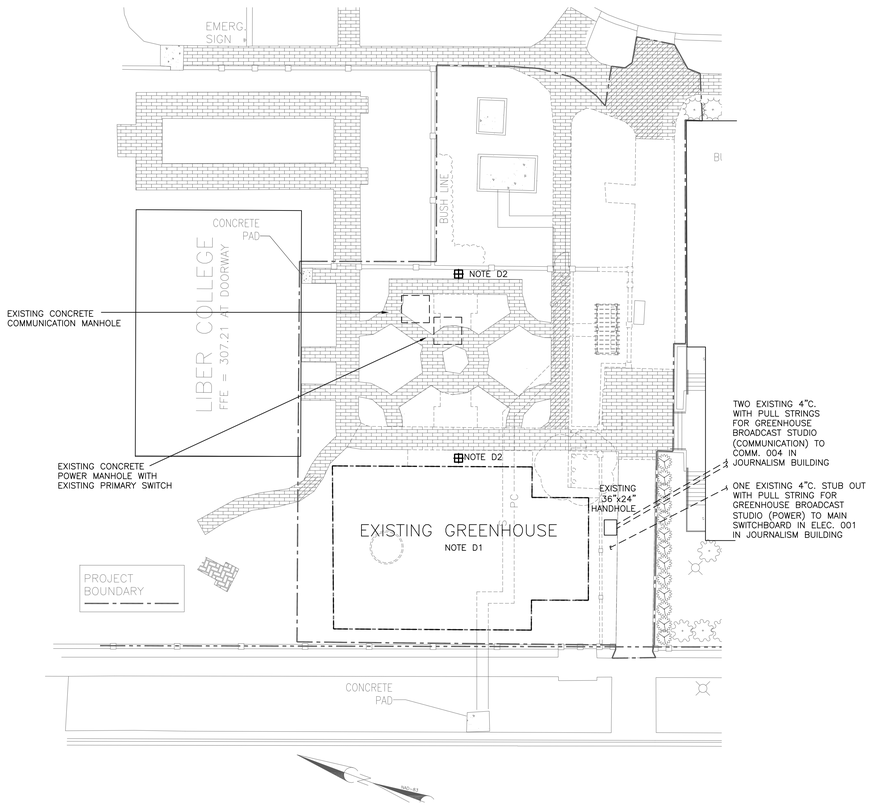

1 ELECTRICAL SITE DEMOLITION PLAN

E0.2 SCALE: 1/16" = 1'-0"

N PLAN NORTH

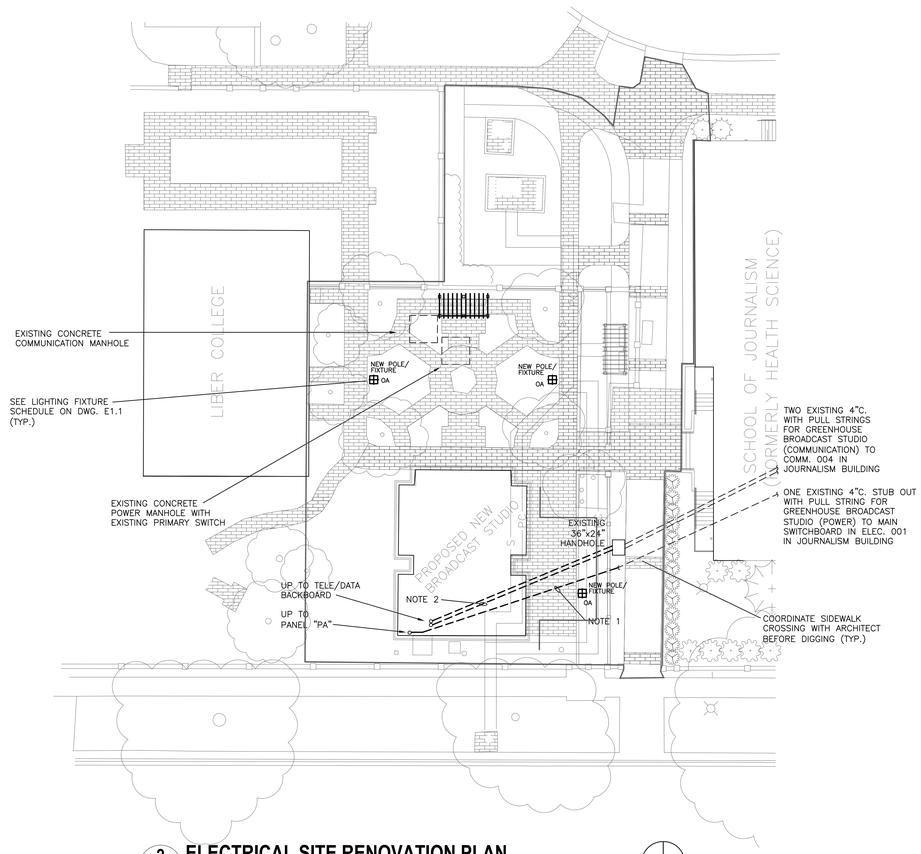

2 ELECTRICAL SITE RENOVATION PLAN

E0.2 SCALE: 1/16" = 1'-0"

N PLAN NORTH

ELECTRICAL SITE DEMOLITION NOTES

D1. ALL ELECTRICAL WITHIN AND ON THE GREENHOUSE SHALL BE DEMOLISHED.

D2. REMOVE EXISTING LIGHT FIXTURES/POLES AND TURN OVER TO OWNER. EXTEND EXISTING CIRCUITS IN CONDUIT TO NEW FIXTURES/POLES AS REQUIRED.

ELECTRICAL SITE RENOVATION NOTES

1. EXTEND 4" CONDUIT STUB OUT FROM USC SCHOOL OF JOURNALISM (SOJ) BUILDING FOR BROADCAST STUDIO MAIN POWER PANEL "PA". PROVIDE 4-500kcmil, 1# 3 GND. AND CONNECT TO EXISTING 400 AMP, 3 POLE BREAKER IN USC-SOJ SWITCHBOARD (BASEMENT LEVEL).
2. PROVIDE TWO 4" CONDUITS WITH PULL STRINGS FROM EXISTING HANDHOLE TO NEW BACKBOARD LOCATION.

1/16"=1'-0" 4 0 4 16 32 scale feet

AB21310

BEA BELKA ENGINEERING ASSOCIATES, INC.
7 CLUSTERS COURT, SUITE 201
COLUMBIA, SOUTH CAROLINA 29210
(803) 731-0650 fax (803) 731-2880
EMAIL: CEStringfield@bellsouth.net

The Boudreaux Group
The Boudreaux Group, Inc.
1330 Lady St., Suite 500 (29201)
P.O. Box 5695
Columbia, SC 29250
803 779 0247 P
803 771 6844 f
info@boudreauxgroup.com
Interdisciplinary Design Architecture Interiors Planning

A/E Seal: SOUTH CAROLINA BELKA ENGINEERING ASSOC. INC. No. C00953 CERTIFICATE OF AUTHORIZATION

A/E Seal: SOUTH CAROLINA LICENSED PROFESSIONAL ENGINEER No. 26181 10-1-14 JASON L. AREHEART

Project Title
UNIVERSITY OF SOUTH CAROLINA
SCHOOL OF JOURNALISM
BROADCAST STUDIO

BID DOCUMENTS
COLUMBIA, SOUTH CAROLINA

Project No. U-646-12-3
Drawn By JJS
Checked By CES
Date 10.31.14

Revisions

No.	Name	Date

Drawing Title
ELECTRICAL SITE PLANS

Drawing No.
E0.2

LIGHTING FIXTURE SCHEDULE								
SYMBOL	TYPE	DESCRIPTION	MANUFACTURER	MODEL NUMBER	OPTICAL ELEMENT	MOUNTING	VOLTS	LAMPS (PHILIPS OR EQUAL)
	A	6" DIAMETER CYLINDER DOWN LIGHT	PATHWAY	C8P LCR850 3K D6 CC BC	NONE	PENDANT	120	LED – 3000K, 680 LUMENS 11 WATTS
	AE	SAME AS FIXTURE "A" EXCEPT WITH MICRO INVERTER	PATHWAY	C8P LCR850 3K D6 CC BC (WITH BODINE MICRO-INVERTER)	NONE	PENDANT	120	LED – 3000K, 680 LUMENS 11 WATTS
	B	6" LED DOWNLIGHT, CLEAR ALZAK REFLECTOR	H.E. WILLIAMS	LED60-OS11/835-CS-EDD*OS-120	NONE	RECESSED	120	LED – 3500K, 1100 LUMENS 17 WATTS
	BE	SAME AS FIXTURE "B" EXCEPT WITH MICRO-INVERTER	H.E. WILLIAMS	LED60-OS11/835-CS-EDD*OS-120 (BODINE MICRO-INVERTER)	NONE	RECESSED	120	LED – 3500K, 1100 LUMENS 17 WATTS
	C	2'x4' FLUORESCENT GRID TROFFER, 2 LAMPS	H.E. WILLIAMS	50G-S24-232-SA12125-EB2-UNV	ACRYLIC LENS	GRID	120	2 – F25T8/ADV841/XEW/ALTO
	CE	SAME AS FIXTURE "C" EXCEPT WITH 1400 LUMEN BATTERY PACK	H.E. WILLIAMS	50G-S24-232-SA12125-EB2-UNV-EL14	ACRYLIC LENS	GRID	120	2 – F25T8/ADV841/XEW/ALTO
	D	2'x4' FLUORESCENT GRID RECESSED INDIRECT, 3 LAMPS	H.E. WILLIAMS	DIG-S24-332-WPR-EB2-UNV	PERFORATED LOUVER	GRID	120	3 – F25T8/ADV841/XEW/ALTO
	F	4' FLUORESCENT WRAPAROUND FIXTURE	H.E. WILLIAMS	17-4-232-A-EB2-UNV	ACRYLIC LENS	SURFACE	120	2 – F25T8/ADV841/XEW/ALTO
	GE	LED ABOVE DOOR EGRESS FIXTURE WITH MICRO-INVERTER WHITE FINISH	LUMINII	K-24-D-34K-SO-S-F-F-WH (WITH BODINE MICRO-INVERTER)	ACRYLIC LENS	UNDER EAVE AT DOORWAY	120	LED – 3400K, 500 LUMENS 13 WATTS
	H	SMALL LED CLOSET LIGHT FIXTURE	BROWNLEE	1080-B6LED	ACRYLIC LENS	CEILING	120	LED – 3500K, 105 LUMENS 6 WATTS
	JE	SAME AS FIXTURE "A" EXCEPT WITH 1400 LUMEN BATTERY PACK	H.E. WILLIAMS	77-4-232-EB2-UNV-WG-7714-EL14	NONE	PENDANT W/ CHAIN	120	2 – F25T8/ADV841/XEW/ALTO
	K	"ON AIR" SIGN, DOUBLE FACE, WET LOCATION (CUSTOM SIGN)	KENALL	METEDU MW R "ON AIR" DT	NONE	END MTD. ON WALL	120	L.E.D. (INCLUDED)
	OA	TRADITIONAL USC STANDARD LANTERN ON POST TOP	STERNBERG	MAIN STREET B-MS805B150MH/3/R05FHC/4AIR45T5/ML/CA/CM	ACRYLIC LENS	14' POLE	120	1 – 150W MH (COATED)
	X	EXIT SIGN, EDGE LIT TYPE, RED LETTERS, BATTERY PACK	CHLORIDE	45VL (MOUNTING) 1(2) RM (CHEVRONS)	NONE	WALL OR CEILING	120	L.E.D. (INCLUDED)

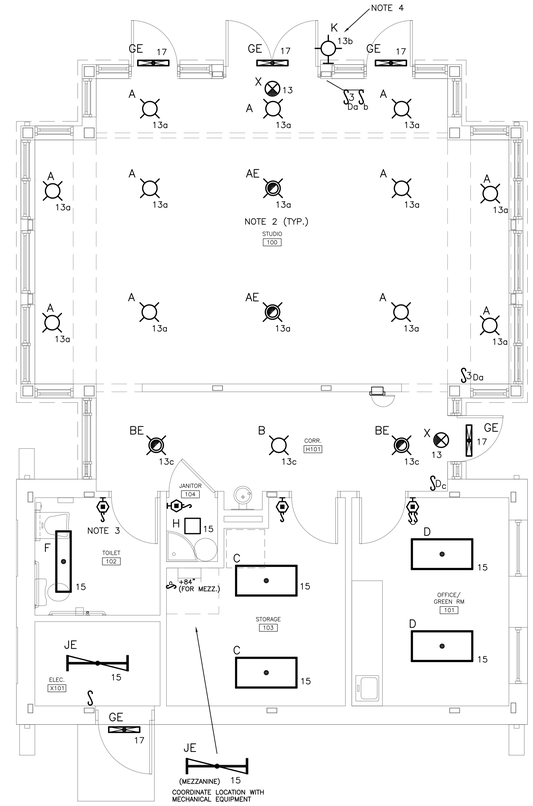

1 LIGHTING PLAN
E1.1 SCALE: 1/4" = 1'-0"

N
PLAN NORTH

LIGHTING NOTES

1. ALL LIGHTING SHALL BE FED FROM PANEL "PA" WITH CIRCUIT NUMBERS AS INDICATED.
2. COORDINATE EXACT MOUNTING LOCATIONS OF FIXTURES IN THIS ROOM WITH ARCHITECT BEFORE ROUGH-IN.
3. RESTROOM LIGHTING AND EXHAUST FAN SHALL BE CONTROLLED SIMULTANEOUSLY WITH OCCUPANCY SENSOR/SWITCH.
4. IN ADDITION TO SINGLE POLE SWITCH CONTROL OF "ON AIR" LIGHT, CONTRACTOR SHALL PROVIDE INTERFACE CONNECTION (I.E. CONDUCTORS AND CONDUIT) WITH PRODUCTION EQUIPMENT TO CREATE AUTOMATIC CONTROL. COORDINATE WITH A/V INSTALLER AND USC END USER.

1/4"=1'-0" scale 2 0 2 4 8 feet

AB21310

BELKA ENGINEERING ASSOCIATES, INC.
7 CLUSTERS COURT, SUITE 201
COLUMBIA, SOUTH CAROLINA 29210
(803) 731-0650 fax (803) 731-2880
EMAIL: CEStringfield@bellsouth.net

The Boudreaux Group
The Boudreaux Group, Inc.
1330 Lady St., Suite 500 (29201)
P.O. Box 5905
Columbia, SC 29250
803 799 0211 P
803 771 6844 F
info@boudreauxgroup.com
Interior Design Library Design Architecture Interiors Planning

A/E Seal: SOUTH CAROLINA BELKA ENGINEERING ASSOC. INC. No. C00953 CERTIFICATE OF AUTHORIZATION

A/E Seal: SOUTH CAROLINA No. 26181 REGISTERED PROFESSIONAL ENGINEER CHARLES E. STRINGFIELD 10-1-14

Project Title
UNIVERSITY OF SOUTH CAROLINA
SCHOOL OF JOURNALISM
BROADCAST STUDIO

BID DOCUMENTS

COLUMBIA, SOUTH CAROLINA

Project No. 1402.12-3
Drawn By JJS
Checked By CES
Date 10.3.14

Revisions

No.	Name	Date

Drawing Title
LIGHTING PLAN

Drawing No.
E1.1

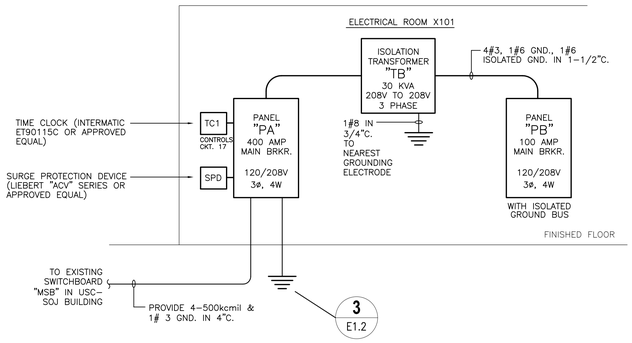

2 POWER SINGLE LINE DIAGRAM
E1.2 SCALE: NONE

ELECTRICAL CONTRACTOR SHALL PROVIDE ALL A/V, DATA, & PRODUCTION INFRASTRUCTURE (CONDUITS AND BOXES) AS OUTLINED BY A/V CONSULTANT AND OWNER'S PRODUCTION LAYOUT SHOWN ON "EAV" DRAWINGS IN THIS SET.

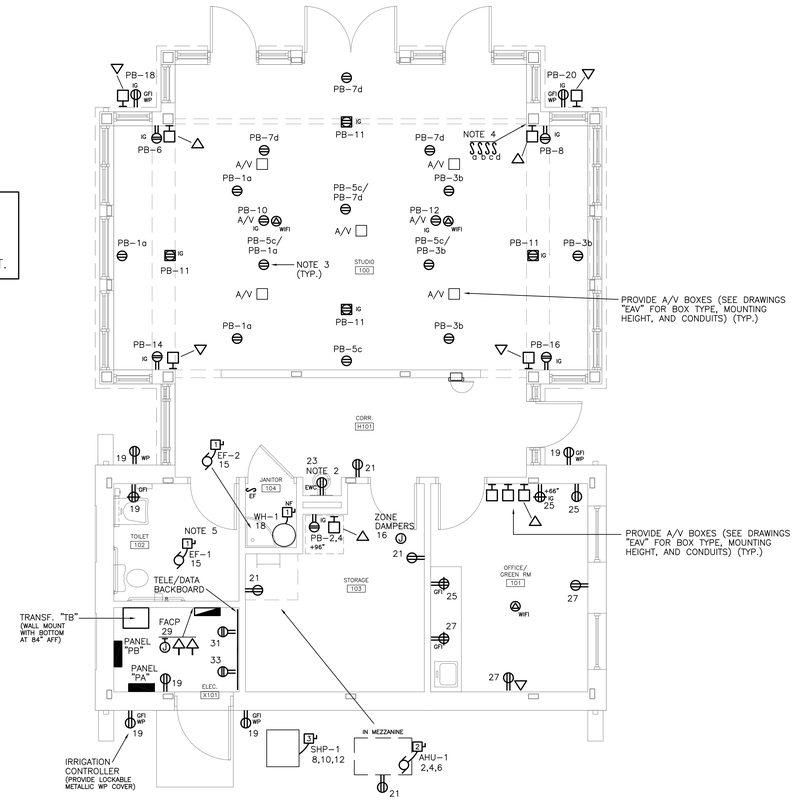

1 POWER PLAN
E1.2 SCALE: 1/4" = 1'-0"

PLAN NORTH

POWER NOTES

1. ALL RECEPTACLES AND EQUIPMENT SHALL BE FED FROM PANEL "PA" WITH CIRCUIT NUMBERS AS INDICATED, UNLESS NOTED OTHERWISE. ALL RECEPTACLES AND EQUIPMENT IN STUDIO 100 SHALL BE FED FROM PANEL "PB" WITH CIRCUIT NUMBERS AS INDICATED, UNLESS NOTED OTHERWISE.
2. NOTED RECEPTACLE IS FED VIA A GFCI TYPE CIRCUIT BREAKER.
3. CEILING MOUNTED DUPLEX RECEPTACLES (FOR PRODUCTION LIGHTING) SHALL BE CONTROLLED BY WALL MOUNTED SWITCHES.
4. DUPLEX RECEPTACLES (EXCEPT RECEPTACLES DENOTED WITH "IG") SHALL BE SWITCHED WITH WALL SWITCHES INDICATED ON PLAN IN THIS ROOM (ONE SWITCH PER CIRCUIT). COORDINATE EXACT RECEPTACLE/SWITCH LAYOUT/CONFIGURATION WITH OWNER.
5. LIGHTING AND EXHAUST FAN IN THIS RESTROOM SHALL BE CONTROLLED SIMULTANEOUSLY WITH OCCUPANCY SENSOR SHOWN ON LIGHTING PLAN.

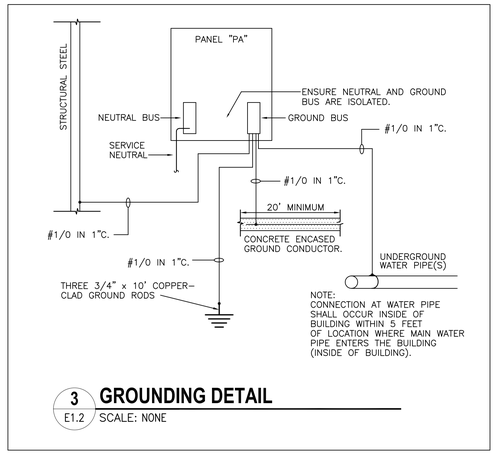

3 GROUNDING DETAIL
E1.2 SCALE: NONE

120/208V, 3 PH., 4W, 60 HZ
400 AMP MAIN BREAKER
SURFACE MOUNTED
65,000 A.I.C. SYM. (MINIMUM)

PANEL "PA"

LOADS SERVED	BKR. AMP	LOAD KVA	CKT. NO.	(S / N)	CKT. NO.	LOAD KVA	BKR. AMP	LOADS SERVED	
		4.4	1		2	4.7			
(6) TRANSFORMER "TB" (PANEL "PB")	50	3.3	3		4	4.7	50	AHU-1	(6)
		3.7	5		6	4.7			
SPARE	20	–	7		8	2.4			
SPARE	20	–	9		10	2.4	35	SHP-1	(6)
SPARE	20	–	11		12	2.4			
LIGHTING – STUDIO & CORRIDOR	20	1.5	13		14	–	20	SPARE	
LGT – STOR/RR/ELEC/GREEN	20	0.8	15		16	0.2	20	ZONE DAMPERS	
EXTERIOR LIGHTING	20	0.4	17		18	1.7	20	WATER HEATER	
RECPS – EXTERIOR/RR/ELEC	20	1.0	19		20	–	20	SPARE	
RECPS – STOR/CORRIDOR	20	0.8	21		22	–	20	SPARE	
ELECTRICAL WATER COOLER	20*	0.6	23		24	–	20	SPARE	
RECPS – GREEN ROOM	20	0.6	25		26	–	20	SPARE	
RECPS – GREEN ROOM	20	0.6	27		28	–	20	SPARE	
FIRE ALARM CONTROL PANEL	20	0.5	29		30	–	20	SPARE	
RECP – TELE/DATA BOARD	20	0.4	31		32	–	20	SPARE	
RECP – TELE/DATA BOARD	20	0.4	33		34	–	20	SPARE	
SPARE	20	–	35		36	–	20	SPARE	
		–	37		38	–	20	SPARE	
SURGE PROTECTIVE DEVICE (SPD)	80	–	39		40	–	20	SPARE	
		–	41		42	–	20	SPARE	

CONNECTED LOADS (KVA)
øA 15.0 øB 13.2 øC 14.0

TOTAL LOADS (KVA)
42.2

* DENOTES GFIC BREAKER

120/208V, 3 PH., 4W, 60 HZ
100 AMP MAIN BREAKER
SURFACE MOUNTED
10,000 A.I.C. SYM. (MINIMUM)

PANEL "PB"
WITH ISOLATED GROUND BUS

LOADS SERVED	BKR. AMP	LOAD KVA	CKT. NO.	(S / N)	CKT. NO.	LOAD KVA	BKR. AMP	LOADS SERVED
CEILING RECPS – PROD (NORTH)	20	0.9	1		2	1.0	20	RECP – EQUIPMENT RACK
CEILING RECPS – PROD (SOUTH)	20	0.9	3		4	1.0	20	RECP – EQUIPMENT RACK
CEILING RECPS – PROD (WEST)	20	0.9	5		6	0.4	20	WALL RECPS – PRODUCTION
CEILING RECPS – PROD (EAST)	20	0.9	7		8	0.4	20	WALL RECPS – PRODUCTION
SPARE	20	–	9		10	1.0	20	CEILING RECP – A/V
FLOOR RECPS – PRODUCTION	20	0.6	11		12	1.0	20	CEILING RECP – A/V
SPARE	20	–	13		14	0.4	20	WALL RECPS – PRODUCTION
SPARE	20	–	15		16	0.4	20	WALL RECPS – PRODUCTION
SPARE	20	–	17		18	0.8	20	RECPS – EXTERIOR
SPARE	20	–	19		20	0.8	20	RECPS – EXTERIOR
SPARE	20	–	21		22	–	20	SPARE
SPARE	20	–	23		24	–	20	SPARE
SPARE	20	–	25		26	–	20	SPARE
SPARE	20	–	27		28	–	20	SPARE
SPARE	20	–	29		30	–	20	SPARE

CONNECTED LOADS (KVA)
øA 4.4 øB 3.3 øC 3.7

TOTAL LOADS (KVA)
11.4

1/4"=1'-0" scale 2 0 2 4 8 feet

AB21310
BEA BELKA ENGINEERING ASSOCIATES, INC.
7 CLUSTERS COURT, SUITE 201
COLUMBIA, SOUTH CAROLINA 29210
(803) 731-0650 fax (803) 731-2880
EMAIL: CEStringfield@bellsouth.net

The Boudreaux Group
The Boudreaux Group, Inc.
1330 Lady St., Suite 500 (29201)
P.O. Box 5905
Columbia, SC 29250
803 799 0211 P
803 771 6844 F
info@boudreauxgroup.com
Interiors Graphic Design Architecture Interiors Planning

A/E Seal
BELKA ENGINEERING ASSOC. INC. No. C00953
CERTIFICATE OF AUTHORIZATION
SOUTH CAROLINA

A/E Seal
SOUTH CAROLINA LICENSED PROFESSIONAL ENGINEER No. 26181 10-1-14 CHRISTOPHER JASON STRINGFIELD

Project Title
UNIVERSITY OF SOUTH CAROLINA
SCHOOL OF JOURNALISM
BROADCAST STUDIO

BID DOCUMENTS
COLUMBIA, SOUTH CAROLINA

Project No. 14-02-2-3
Drawn By JJS
Checked By CES
Date 10.31.14

Revisions No.	Name	Date

Drawing Title
POWER PLAN

Drawing No.
E1.2

FIRE ALARM SINGLE LINE DIAGRAM NOTES

1. PROVIDE TESTING OF BOTH THE FIRE ALARM SYSTEM AND THE SERIAL DACT UNIT IN ACCORDANCE WITH NFPA 72. COORDINATE PROGRAMMING AND TESTING OF DACT UNIT WITH CENTRAL MONITORING SERVICE. COORDINATE WITH USC FIRE & SAFETY (CONTACT PERSON: TODD GRIFFIN 777-5269).
2. PROVIDE SURGE PROTECTION DEVICE (SPD) ON PRIMARY POWER CIRCUITS SERVING FIRE ALARM CONTROL PANEL.
3. PROVIDE PROGRAMMING OF FACP USING POST-CONSTRUCTION, OWNER-SUPPLIED ROOM NAMES AND NUMBERS. CHANGE ORDERS FOR REPROGRAMMING DUE TO THE USE OF "CONSTRUCTION DRAWING" ROOM NAMES AND NUMBERS SHALL NOT BE ACCEPTED. COORDINATE WITH ARCHITECT AND OWNER TO RECEIVE FINAL ACCURATE ROOM NAMES AND NUMBERS.
4. PROVIDE FIRE ALARM INTERFACE CONNECTION WITH HVAC CONTROL PANEL FOR ALL RTU, AHU, AND VAV SHUTDOWN. COORDINATE WITH MECHANICAL.

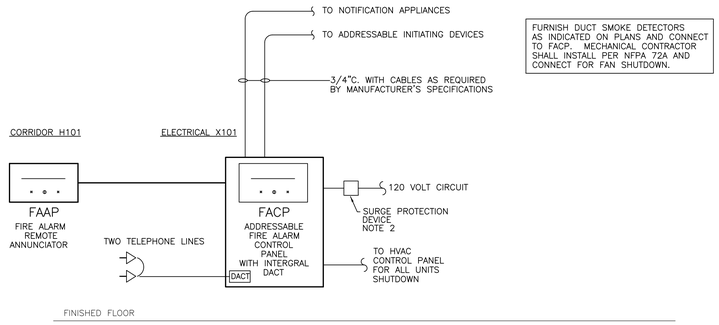

FURNISH DUCT SMOKE DETECTORS AS INDICATED ON PLANS AND CONNECT TO FACP. MECHANICAL CONTRACTOR SHALL INSTALL PER NFPA 72A AND CONNECT FOR FAN SHUTDOWN.

2 FIRE ALARM SINGLE LINE DIAGRAM
E1.3 SCALE: NONE

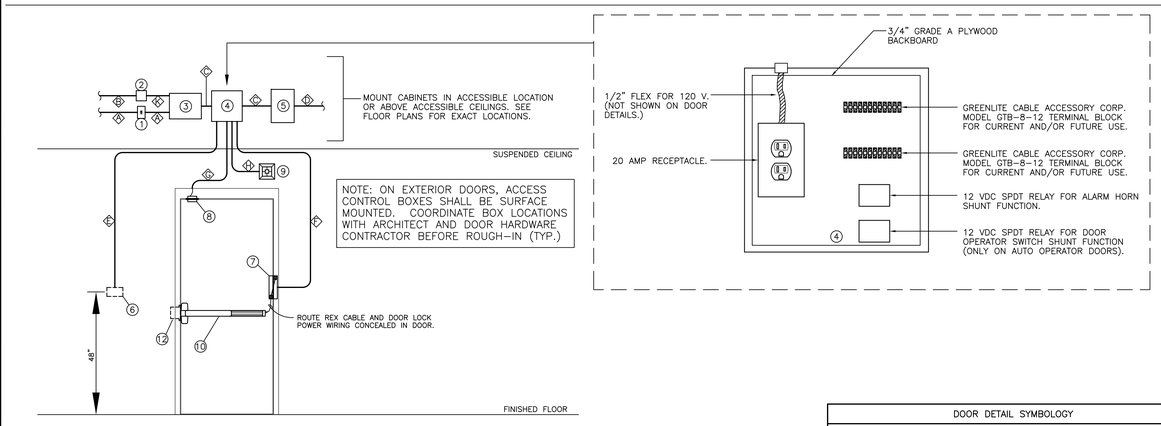

4 ACCESS CONTROL DOOR DETAIL
E1.3 SCALE: NONE

5 ACCESS CONTROL DOOR DETAIL (SAME AS "4" EXCEPT DOUBLE DOORS)
E1.3 SCALE: NONE

6 ACCESS CONTROL DOOR DETAIL (SAME AS "4" EXCEPT MONITOR ONLY)
E1.3 SCALE: NONE

ACCESS CONTROL NOTES

1. DOOR LOCK POWER SUPPLIES FOR DOOR HARDWARE SHALL BE FURNISHED BY THE DOOR HARDWARE SUPPLIER. ELECTRICAL CONTRACTOR SHALL BE RESPONSIBLE FOR MOUNTING AND WIRING EACH POWER SUPPLY UNIT.
2. ELECTRIC STRIKES, LOCKS AND POWER TRANSFER HINGES SHALL BE FURNISHED BY THE DOOR HARDWARE SUPPLIER. ELECTRICAL CONTRACTOR SHALL BE RESPONSIBLE FOR PROVIDING WIRING FROM THE JUNCTION BOX ABOVE THE DOOR, THROUGH THE POWER TRANSFER HINGE, TO THE ELECTRIC LATCH. ELECTRICAL CONTRACTOR SHALL PROVIDE ALL DRILLING REQUIRED TO INSTALL WIRING IN FRAMES AND DOORS. DIVISION 26 SHALL BE RESPONSIBLE FOR REMOVING AND RE-INSTALLING HARDWARE AND DOOR COMPONENTS AS REQUIRED TO INSTALL WIRING AND MAKE REQUIRED ADJUSTMENTS.
3. COORDINATE WITH DOOR HARDWARE AND DOOR FRAME MANUFACTURERS TO ENSURE THAT PROPERLY SIZED ELECTRICAL BACK BOXES ARE PROVIDED FOR EACH POWER TRANSFER HINGE AND EACH MAGNETIC DOOR POSITION SWITCH.
4. ALL ACCESS CONTROL SYSTEM WIRES AND CABLES SHALL BE INSTALLED IN RACEWAY. LABEL ALL WIRES AND CABLES AT EACH END.
5. ACCESS CONTROL SYSTEM RACEWAYS SHALL BE CONCEALED IN WALLS AND ABOVE ACOUSTICAL DROP CEILINGS. RACEWAYS MAY BE INSTALLED EXPOSED IN EQUIPMENT ROOMS. LABEL ALL RACEWAYS AT EACH END.
6. EDGE PROTECTION: ELECTRICAL CONTRACTOR SHALL BE RESPONSIBLE FOR PROVIDING EDGE PROTECTION FOR DOORS, DOOR FRAMES, DOOR HARDWARE, AND RACEWAYS ASSOCIATED WITH ACCESS CONTROL SYSTEM WIRING. RUBBER GROMMETS AND/OR FOAM-IN-PLACE TYPE PROTECTION SHALL BE PROVIDED. EDGE PROTECTION METHODS SHALL NOT INHIBIT FUTURE REPLACEMENT OF WIRING. CABLES WITH DAMAGED INSULATION AND/OR OUTER JACKETS SHALL BE COMPLETELY REPLACED AT THE ELECTRICAL CONTRACTORS EXPENSE; ELECTRICAL CONTRACTOR SHALL NOT ATTEMPT TO REPAIR DAMAGED CABLES.
7. SPLICES IN ACCESS CONTROL WIRING SHALL BE KEPT TO A MINIMUM. WHERE SPLICES ARE REQUIRED TO CONNECT PIGTAIL WIRING TO FIELD CABLES, ELECTRICAL CONTRACTOR SHALL USE THE COMBINATION OF AN INSULATED BUTT-SPLICE CONNECTOR AND HEAT-SHRINKABLE TUBING FOR EACH SPLICE. EACH SPLICED CIRCUIT SHALL BE PROPERLY TESTED FOR CONTINUITY.
8. FIRE ALARM SYSTEM: PROVIDE PROGRAMMING FOR FIRE ALARM CONTROL PANEL AS REQUIRED TO CAUSE ACCESS CONTROLLED DOORS TO BE RELEASED (UNLOCKED) WHEN A GENERAL FIRE ALARM OCCURS.
9. INDIVIDUAL DOOR DETAILS DEPICT DOORS AS SEEN FROM SECURE SIDE OF DOOR. VERIFY ALL DOOR CONFIGURATIONS PRIOR TO ROUGH-IN TO ENSURE BACK BOXES AND CONDUITS ARE PLACED FOR ALL DEVICES NECESSARY FOR A FULLY FUNCTIONAL SYSTEM.

DOOR DETAIL SYMBOLOGY

DEVICES

1. 20 AMP SINGLE POLE TOGGLE SWITCH.
2. FIRE ALARM ADDRESSABLE INTERFACE UNIT/CONTROL RELAY.
3. DOOR LOCK POWER SUPPLY. FURNISHED BY DOOR HARDWARE SUPPLIER.
4. 12" X 12" X 6" NEMA1 JUNCTION BOX WITH A 3/4" INTERIOR GRADE A FIRE RETARDANT BACKBOARD. SEE DETAIL 3 ON THIS SHEET.
5. ACCESS CONTROL TERMINAL CONTROLLER CABINET (TC#).
6. ACCESS CONTROL CARD READER MOUNTED ON UNSECURE SIDE OF DOOR/GATE.
7. DOOR MOUNTED ELECTRIC POWER TRANSFER DEVICE. FURNISHED BY DOOR HARDWARE SUPPLIER.
8. MAGNETIC DOOR POSITION SWITCH. FURNISHED BY DOOR HARDWARE SUPPLIER.
9. DOOR ALARM HORN. SEE SYSTEM PLANS FOR SIDE OF DOOR/LOCATION.
10. EGRESS HARDWARE WITH INTEGRAL ELECTRIC RETRACT VERTICAL ROD AND REX SWITCH. FURNISHED BY DOOR HARDWARE SUPPLIER.
11. EGRESS HARDWARE WITH INTEGRAL REX SWITCH. FURNISHED BY DOOR HARDWARE SUPPLIER.
12. ELECTRIC STRIKE. FURNISHED BY DOOR HARDWARE SUPPLIER.

CONDUIT/CABLE

- 120 VAC: 1/2" EMT WITH THREE #12 AWG THHN/THWN WIRES TO ACCESS CONTROL BACKBOARD.
- FIRE ALARM CONTROL: 1/2" EMT RUN TO FIRE ALARM SIGNALING LINE AND POWER CIRCUITS. CABLE SHALL BE PER FIRE ALARM MANUFACTURER'S RECOMMENDATION.
- CABINET INTERCONNECTION: 1" EMT RUN BETWEEN ACCESS CONTROL CABINETRY.
- RS485 COMMUNICATIONS: 1/2" EMT WITH RS485 CABLE RUN TO ACCESS CONTROL NETWORK PANEL AT ACCESS CONTROL BACKBOARD. CABLE SHALL BE PER ACCESS CONTROL MANUFACTURER'S RECOMMENDATION.
- CARD READER: 1" EMT RUN WITH ONE ALPHA #5198 CABLE.
- DOOR LOCK POWER AND REX SWITCH COMBINED: 3/4" EMT WITH TWO #12AWG THHN, ONE #12 AWG GROUND (POWER) AND ONE BELDEN #8761 CABLE.
- DOOR POSITION SWITCH: 1/2" EMT WITH TWO OR FOUR BELDEN #8761 CABLES (TWO FOR SINGLE SWITCH, FOUR FOR DOUBLE SWITCHES). ROUTE CABLES CONCEALED IN DOOR FRAME TO TERMINATE ON DOOR POSITION SWITCH(ES).
- DOOR ALARM HORN: 1/2" EMT WITH ONE BELDEN #8761 CABLE.
- REX SWITCH: 1/2" EMT WITH ONE BELDEN #8761 CABLE. COMBINE LATCH POWER AND REX CABLES IN A SINGLE 3/4" EMT CONDUIT WHEN REX DEVICE IS INTEGRAL TO EGRESS HARDWARE.
- FIRE ALARM INTERFACE: 1/2" EMT WITH ONE BELDEN #8719 CABLE.
- AUTO DOOR OPERATOR SWITCH SHUNT: 1/2" EMT WITH ONE BELDEN #8719 CABLE.

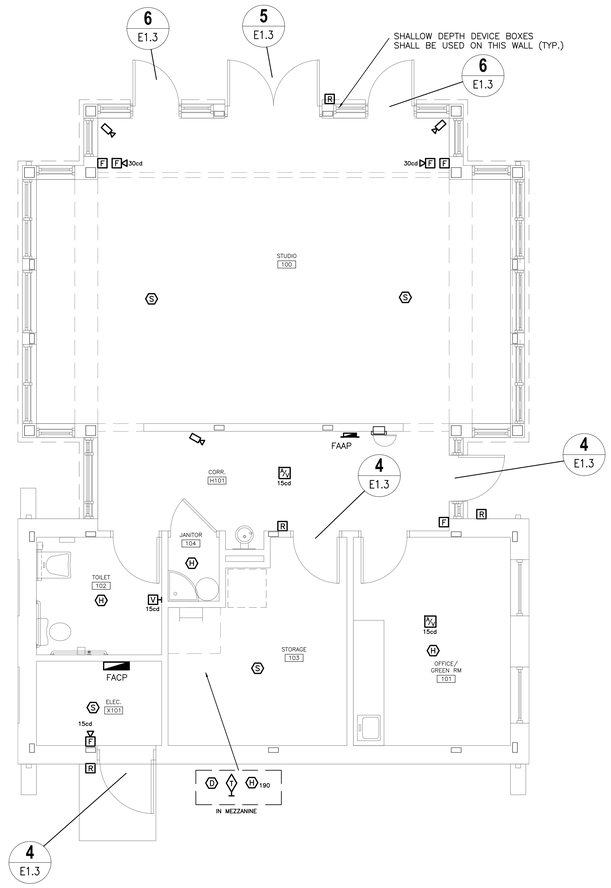

1 SYSTEMS PLAN
E1.3 SCALE: 1/4" = 1'-0"

PLAN NORTH

ELECTRICAL X101

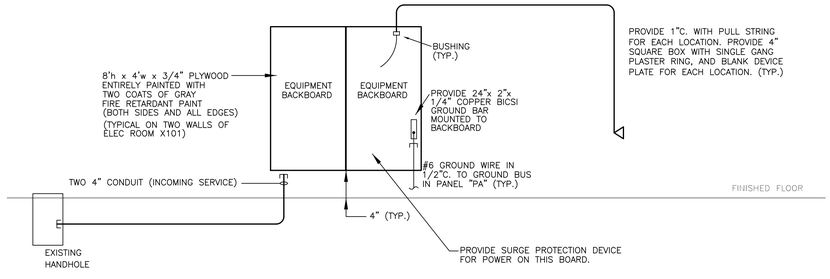

3 COMMUNICATIONS SINGLE LINE DIAGRAM
E1.3 SCALE: NONE

1/4"=1'-0" scale 2 0 2 4 8 feet

AB21310

BELKA ENGINEERING ASSOCIATES, INC.
7 CLUSTERS COURT, SUITE 201
COLUMBIA, SOUTH CAROLINA 29210
(803) 731-0650 fax (803) 731-2880
EMAIL: CEStringfield@bellsouth.net

The Boudreaux Group
The Boudreaux Group, Inc.
1330 Lady St., Suite 300 (29201)
P.O. Box 5905
Columbia, SC 29250
803 799 0211 P
803 771 6844 F
info@boudreauxgroup.com
Interior Design/Library Design Architecture Interiors Planning

A/E Seal: BELKA ENGINEERING ASSOC. INC. No. C00953 CERTIFICATE OF AUTHORIZATION SOUTH CAROLINA

A/E Seal: No. 26181 REGISTERED PROFESSIONAL ENGINEER JASON L. ARENDT 10-1-14 SOUTH CAROLINA

Project Title
UNIVERSITY OF SOUTH CAROLINA
SCHOOL OF JOURNALISM
BROADCAST STUDIO
BID DOCUMENTS
COLUMBIA, SOUTH CAROLINA

Project No.: U14.66.2-3
Drawn By: JJS
Checked By: CES
Date: 10.31.14

Revisions		
No.	Name	Date

Drawing Title
SYSTEMS PLAN

Drawing No.
E1.3

EAV USC JOURNALISM GREENHOUSE STUDIO DRAWING LIST	
SHEET NUMBER	SHEET TITLE
AV INFRASTRUCTURE REFERENCE AND STANDARDS	
EAV000	AV INFRASTRUCTURE REFERENCE
AV INFRASTRUCTURE PLANS	
EAV101	AV INFRASTRUCTURE FIRST FLOOR PLAN
AV INFRASTRUCTURE REFLECTED CEILING PLANS	
EAV201	AV INFRASTRUCTURE FIRST FLOOR RCP

AV INFRASTRUCTURE SYMBOLS

DEVICE	DESCRIPTION
	EMT CONDUIT CONCEALED IN SLAB OR UNDER FINISHED FLOOR. ROUTE AS INDICATED.
	EMT CONDUIT CONCEALED IN WALL OR ABOVE FINISHED CEILING. ROUTE AS INDICATED.
	EMT CONDUIT STUB UP INTO ACCESSIBLE CEILING UNLESS OTHERWISE INDICATED
	WALL MOUNTED BOXES/DEVICES: REFER TO "AV SYSTEMS BOX SCHEDULE" FOR TYPE AND SIZE. MOUNT AT HEIGHT AS NOTED.
	BOX MOUNTED AT RECEPTACLE HEIGHT AS DEFINED FOR THIS PROJECT
	BOX MOUNTED AT SWITCH HEIGHT AS DEFINED FOR THIS PROJECT
	BOX MOUNTED AT WALL TELEPHONE HEIGHT AS DEFINED FOR THIS PROJECT
	BOXES/DEVICES MOUNTED IN FINISHED CEILING
	BOXES/DEVICES MOUNTED IN FLOOR OR FURNITURE AS NOTED

AV SYSTEMS BOX SCHEDULE

DEVICE	DESCRIPTION
A	TWO GANG 3.5" DEEP BOX WITH ONE GANG PLASTER RING
B	TWO GANG 3.5" DEEP BOX WITH TWO GANG PLASTER RING
C	THREE GANG 3.5" DEEP BOX WITH THREE GANG PLASTER RING
D	FOUR GANG 3.5" DEEP BOX WITH FOUR GANG PLASTER RING
E	SIX GANG 3.5" DEEP BOX WITH SIX GANG PLASTER RING
F	6" X 6" X 4" JUNCTION BOX
G	8" X 8" X 4" JUNCTION BOX
H	10" X 10" X 4" JUNCTION BOX
K	12" X 12" X 4" JUNCTION BOX
M	CONDUIT TROUGH 8" HEIGHT MINIMUM FOR CABLE BEND RADIUS (WIDTH AND LENGTH AS REQUIRED)
P	FLOOR BOX – MANUFACTURER: FSR, INC. BOX: FL-700 COVER: VARIES WITH FLOOR FINISH AND COLOR. COORDINATE FOR FLOOR SURFACE SELECTED BY THE ARCHITECT.
R	FLOOR BOX – MANUFACTURER: FSR, INC. BOX: FL-600P-6 COVER: VARIES WITH FLOOR FINISH AND COLOR. COORDINATE FOR FLOOR SURFACE SELECTED BY THE ARCHITECT.
S	CEILING LOUDSPEAKER ENCLOSURE MANUFACTURER TANNOY MODEL # CMS601 PI BACK CAN
T	WALL BOX FLAT PANEL POWER/ACCESSORY BOX MANUFACTURER: FSR INC. BOX PART #: PWB-270 WITH WHITE COVER
V	WALL BOX – MANUFACTURER: FSR, INC. BOX: WB-4G-C COVER: SOLID LOCKING COVER
W	FLOOR BOX – MANUFACTURER: FSR, INC. BOX: OWB-CP1 COVER: SOLID LOCKING COVER

CONDUIT INSTALLATION NOTES

ASSOCIATED WITH DIVISION 26

THE RACEWAY SYSTEM FOR AV CABLE SHALL FOLLOW THE NEC AND ALL LOCAL CODES GOVERNING THIS PROJECT. ADDITIONAL REQUIREMENTS ARE AS FOLLOWS:

1. ALL RACEWAY SHOWN IN THESE "EAV" DRAWINGS IS FOR AV CABLE, AND IS IN ADDITION TO ANY CONDUIT SHOWN ON ANY OTHER DRAWINGS.
2. ROUTING OF CONDUIT SHOWN FOR DESIGN INTENT ONLY. COORDINATE EXACT ROUTE BASED ON FIELD CONDITIONS.
3. ALL CONDUIT CONNECTORS SHALL BE FURNISHED WITH NYLON BUSHINGS AND CHASE NIPPLES TO PREVENT DAMAGE TO CABLES FROM BURRED OR UNEVENLY CUT CONDUIT.
4. KEEP 90° BENDS TO A MINIMUM. THE CONDUIT SYSTEM SHALL NOT HAVE MORE THAN THREE 90° BENDS OR THEIR EQUIVALENT (270°) BETWEEN PULL BOXES.
5. ALL PULL BOXES AND OUTLET BOXES SHALL BE AT LEAST 3.5" DEEP.
6. INSTALL NYLON PULL STRINGS IN ALL CONDUITS.
7. CAULK OR OTHERWISE SEAL ALL PENETRATIONS THROUGH ACOUSTICAL PARTITIONS AND BARRIERS WITH ACOUSTICAL SEALANT. SEE DIV. 7 SEALANT SECTION.
8. ALL AV RELATED JUNCTION BOXES AND STUB OUTS SHALL REMAIN ACCESSIBLE AT ALL TIMES.
9. THE STANDARD SIZE FOR ALL AV CONDUIT SHALL BE 0.75" UNLESS OTHERWISE NOTED. ALL EXPOSED CONDUIT SHALL BE ROUTED PARALLEL OR PERPENDICULAR TO STRUCTURE ABOVE.
10. WHERE CONDUIT CONNECTS CEILING SPEAKER ENCLOSURES, THE ENCLOSURES, AND ASSOCIATED SUPPORT HARDWARE SHALL BE PROVIDED BY THE ELECTRICAL CONTRACTOR.
11. CEILING SPEAKERS ARE SHOWN FOR ZONING AND CONDUIT SIZING AND ROUTING ONLY. REFERENCE ARCHITECTURAL REFLECTED CEILING PLANS FOR EXACT CEILING SPEAKER LOCATIONS.
12. ALL CONDUIT SHALL BE (EMT) ELECTRICAL METAL TUBING OR (IMC) INTERMEDIATE METALLIC CONDUIT UNLESS OTHERWISE NOTED.
13. PVC IS UNACCEPTABLE UNLESS OTHERWISE NOTED.

The Boudreaux Group
The Boudreaux Group, Inc.
1330 Lady St., Suite 500 (29201)
P.O. Box 2905
Columbia, SC 29202
803 799 1227 P
803 771 0844 F
info@theboudreauxgroup.com
Interdisciplinary Design Architecture Interiors Planning

waveguide
One West Court Square, Suite 300
Decatur, GA 30030
T 404 815-1919 | waveguide.com

A/E Seal

A/E Seal

Project Title
UNIVERSITY OF SOUTH CAROLINA
SCHOOL OF JOURNALISM
BROADCAST STUDIO

BID DOCUMENTS
COLUMBIA, SOUTH CAROLINA

Project No.
Issue Date 12...3
Drawn By
PG
Checked By
SM
Date
10.31.14

Revisions

No.	Name	Date

No drawing and its design thereon is to be used for any purpose other than that for which it is prepared and intended, and is not to be changed or copied in any form whatsoever, whether in part or in whole, without the written consent of The Boudreaux Group. Visual contact with these documents shall constitute prima facie evidence of acceptance of these restrictions.

Drawing Title
AV INFRASTRUCTURE REFERENCE

Drawing No.
EAV000

Nov 03, 2014 – 1:45pm Z:\USC Journalism Greenhouse Studio 14223\Current Drawings\(E)AV000.dwg.

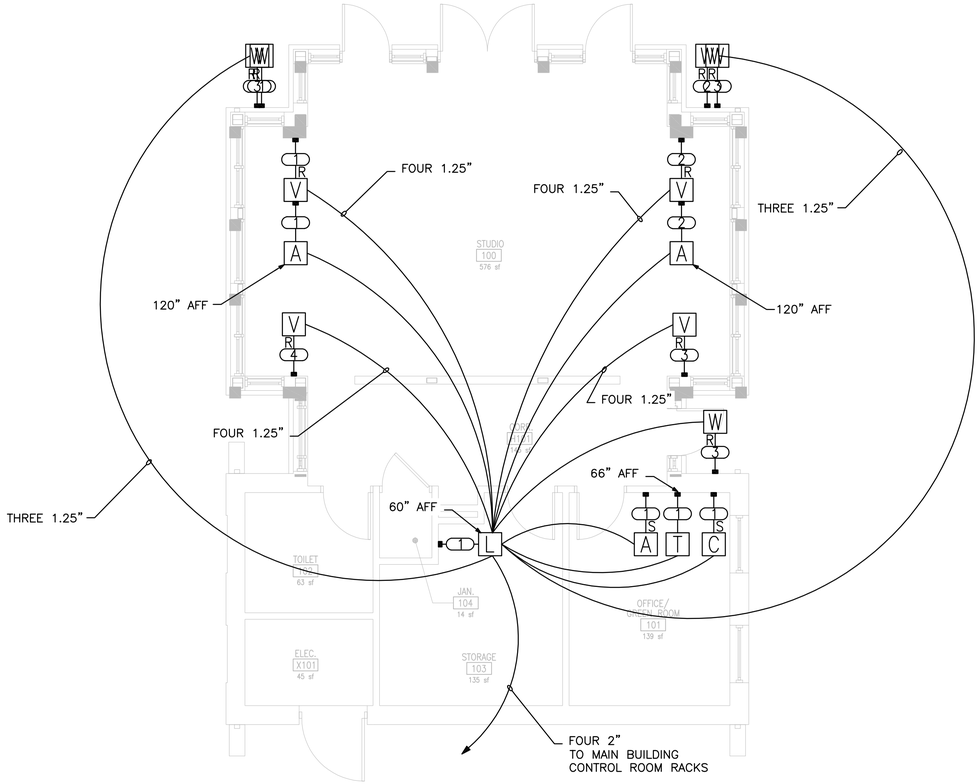

The Boudreaux Group
The Boudreaux Group, Inc.
1320 Lady St., Suite 300 (29201)
P.O. Box 5965
Columbia, SC 29250
803 799 0247 P
803 771 6844 f
info@boudreauxgroup.com
Interdisciplinary Design Architecture Interiors Planning

waveguide
One West Court Square, Suite 300
Decatur, GA 30030
T 404 815-1919 | waveguide.com

A/E Seal

A/E Seal

Project Title
UNIVERSITY OF SOUTH CAROLINA
SCHOOL OF JOURNALISM
BROADCAST STUDIO

BID DOCUMENTS
COLUMBIA, SOUTH CAROLINA

Project No. U-646-12-3
Drawn By PG
Checked By SM
Date 10.31.14

This drawing and the design herein are the property of The Boudreaux Group, Inc. The reproduction, copying, or use of this drawing without the written consent of The Boudreaux Group, Inc. is prohibited and any infringement will be subject to legal action. Copyright © 2001 The Boudreaux Group

Revisions

No.	Name	Date

Drawing Title
AV INFRASTRUCTURE
FIRST FLOOR PLAN

Drawing No.
EAV101

Nov 03, 2014 - 1:45pm Z:\USC Journalism Greenhouse Studio 14223\Current Drawings\(E)AVXX1.dwg.

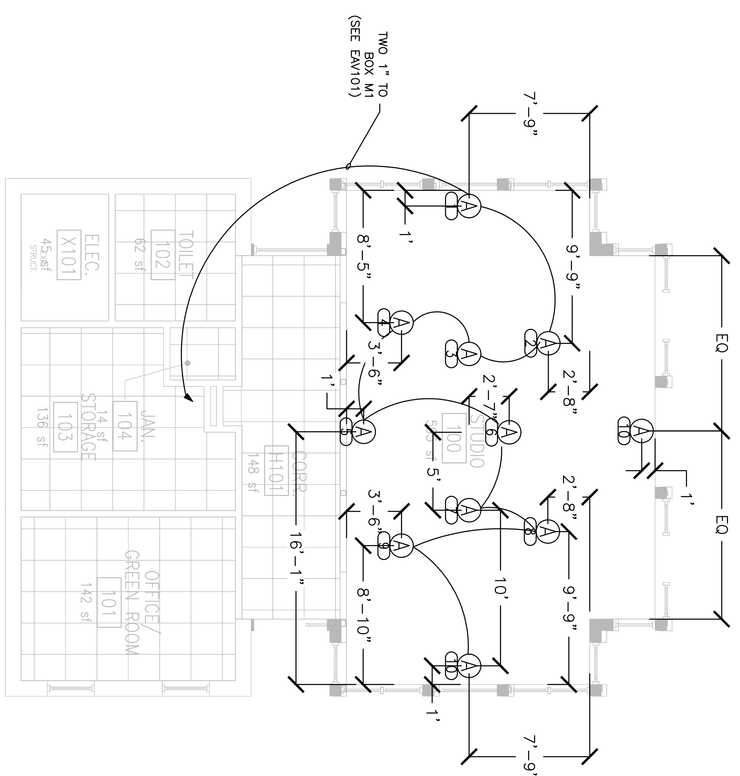

D C B A

Drawing No. **EAV201**

Drawing Title

AV INFRASTRUCTURE
FIRST FLOOR RCP

Revisions		
No.	Name	Date

Project No. U-646-12-3

Drawn By PG

Checked By SM

Date 10.31.14

This drawing and the design thereon are the property of The Boudreaux Group, Inc. The reproduction, copying, or use of this drawing without the written consent of The Boudreaux Group, inc. is prohibited and any infringement will be subject to legal action. Copyright © 2001 The Boudreaux Group

Project Title

UNIVERSITY OF SOUTH CAROLINA
SCHOOL OF JOURNALISM
BROADCAST STUDIO

BID DOCUMENTS

COLUMBIA, SOUTH CAROLINA

A/E Seal

A/E Seal

waveguide
One West Court Square, Suite 300
Decatur, GA 30030
T 404 815-1919 | www.waveguide.com

The Boudreaux Group
The Boudreaux Group, Inc.
1330 Lady St., Suite 500 (29201)
P.O. Box 5695
Columbia, SC 29250
803 799 0247 P
803 771 6844 F
info@boudreauxgroup.com
Interdisciplinary Design Architecture Interiors Planning

LEGEND

Corrugated Transite Heat Sheilds to be Removed

Transite Board on Face of Corrugated Heat Sheilds to be Removed

ACM Glazing/Caulking on Metal Framing of Greenhouse Structure to be Removed. Typical all Framing of Greenhouse Structure Walls and Roof.

ABATEMENT GENERAL NOTES

1. **Contractor shall thoroughly read all specifications and plans and thoroughly review all abatement documents (i.e. ACM and LBP Investigation Reports) prior to commencement of abatement activities.**
2. **As a function of the overall renovations all mechanical, electrical, plumbing and HVAC systems found throughout the building are to be demolished and removed from the building. Contractor shall coordinate with the GC to ensure that only facilities designated to be demolished are removed.**
3. **The Contractor shall be responsible for verification of all site conditions and quantities associated with the abatement prior to the bid. Contractor shall thoroughly clean areas where abatement is to occur prior to abatement operations.**
4. **Contractor is to ensure that all governing EPA, the SCDHEC and OSHA regulations are followed during the abatement of the facility.**
5. **Containment shall be established and in place prior to the start of friable abatement activities.**
6. **Negative pressure shall be established prior to start of gross removal during friable abatement activities.**
7. **Existing HVAC supply and return duct systems leading into the abatement work areas shall be cut and capped prior to start of wet removal activities.**

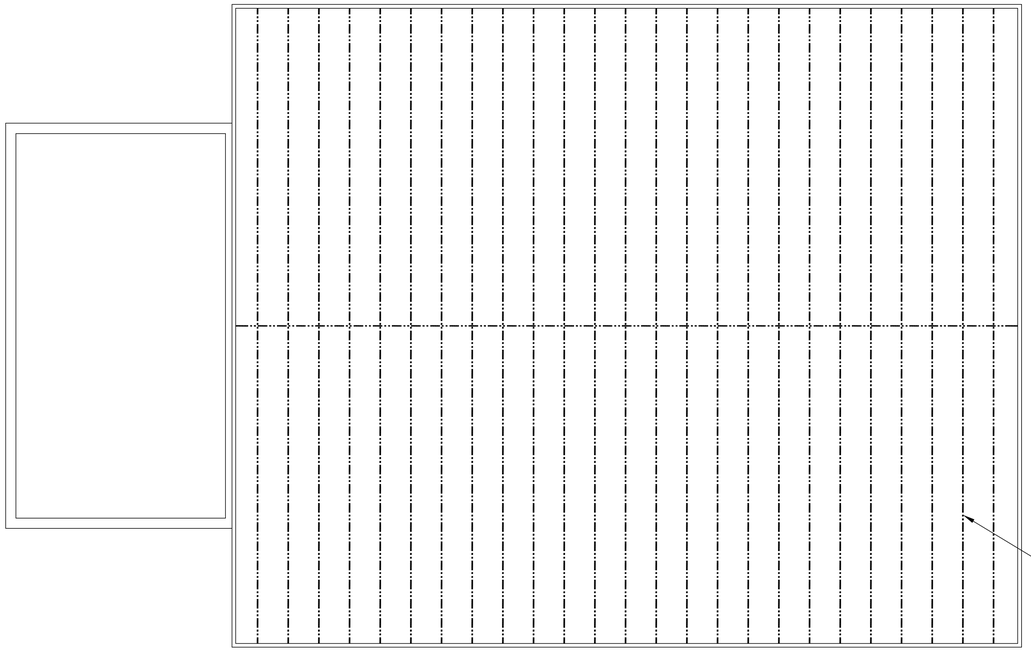

ROOF PLAN
SCALE: 1/4" = 1.0"

ACM Glazing/Caulking Found on all Seams of Entire Greenhouse Structure. Typical under all all Metal Framing for both the Walls and Roof of Structure. Typical all Louvered Openings. Residual Glazing/Caulking will be Found on both the Metal and Glass Building Components. Contractor shall have the Option of Cleaning off Residual Glazing or Disposing of these Building Components as ACM. Contractor shall Ensure that all ACM Glazing/Caulking is Properly Handled and Disposed of as ACM.

ACM Interior Window Glazing (Typical) on all Windows of Masonry Block Structure to be Removed

All Mudded Fittings Found on Mechanical Systems Piping and Expansion Tank within this Space to be abated Utilizing Friable Abatement Means and Methods. All Non-ACM Fiberglass Pipe Insulation shall be Removed and Disposed of as ACM. Contractor to Insure that all Residual Mudding Compound is Remove from all Piping Prior to Disposal.

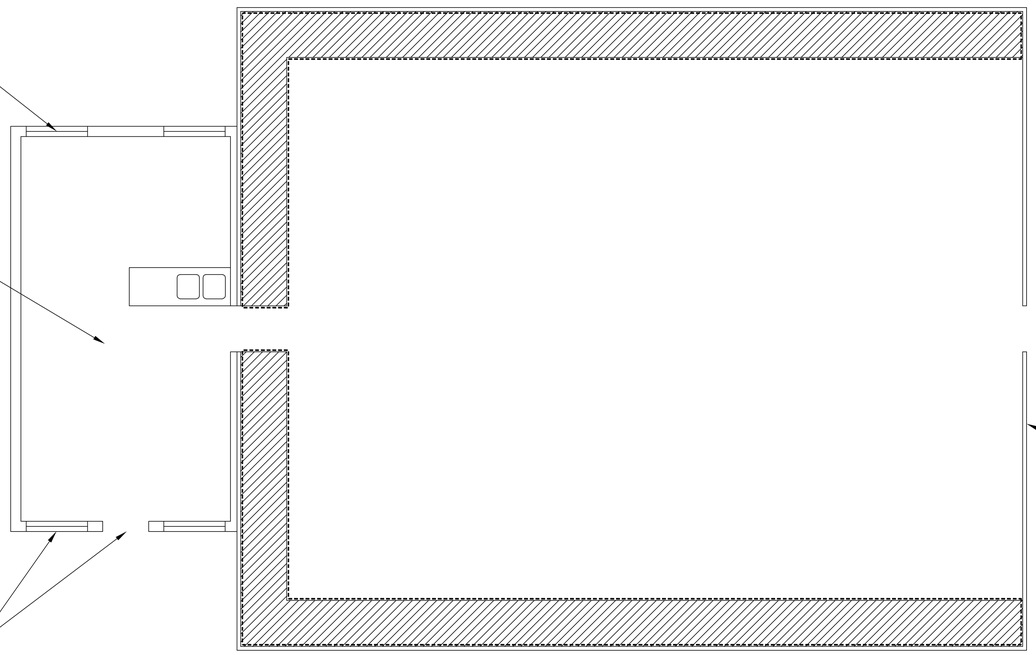

ACM Caulking Found at Interface of Greenhouse Structure and Brick Knee Wall. Contractor to Ensure that all Residual Caulking is Removed from Brick and Building Components

ACM Exterior Caulking (Typical) on all Windows and Doors of Masonry Block Structure to be Removed

FLOOR PLAN
SCALE: 1/4" = 1.0"

F&ME
CONSULTANTS
GEOTECHNICAL · ENVIRONMENTAL · MATERIALS
COLUMBIA, SOUTH CAROLINA

F&ME CONSULTANTS, INC.
3112 Devine Street
Columbia, S.C. 29205

Telephone: (803) 254-4540
Facsimile: (803) 254-4542
gellen@fmecol.com

GLINNA ELLEN
ASBESTOS CONSULTANT PROJECT DESIGNER
SCDHEC ACCREDITATION NO: PD-00088
EXPIRES: 10/07/2015

PROJECT TITLE:
UNIVERSITY OF SOUTH CAROLINA
SCHOOL OF JOURNALISM BROADCAST STUDIO
GREENHOUSE STRUCTURE ASBESTOS ABATEMENT
STATE PROJECT NUMBER H27-6099-MJ
CONSTRUCTION DRAWINGS

CHECKED BY: GME | DRAWN BY:
ORIG. BY: | DRAWN BY:
DRAWN BY: GME | DATE:
DATE: 10/1/2014 | DESCRIPTION:
DRAWING: AB-1 | REV.:

THIS DRAWING AND ASSOCIATED ABATEMENT DESIGN HAS BEEN PREPARED BY A LICENSED ASBESTOS ABATEMENT PROJECT DESIGNER SCDHEC LICENSE NO: PD-00088

SHEET TITLE:
ASBESTOS ABATEMENT PLAN
USC GREENHOUSE STRUCTURE

SHEET:
AB-1