THIS DRAWING IS THE PROPERTY OF B.P. BARBER & ASSOCIATES, INC., AND IS NOT TO BE REPRODUCED OR COPIED IN WHOLE OR IN PART. IT IS ONLY TO BE USED FOR THE PROJECT AND SITE SPECIFICALLY IDENTIFIED HEREIN, AND IS NOT TO BE USED ON ANY OTHER PROJECT.

VICINITY MAP

# ATHLETIC VILLAGE INFRASTRUCTURE DEVELOPMENT CONSTRUCTION-

# BECKHAM FIELD SITE UTILITIES

## PROJECT NO. H27-6056-MJ-E

CONTRACTOR LICENSING NOTES:

1. THE PRIME BIDDER SHALL BE PROPERLY LICENSED IN ACCORDANCE WITH THE SOUTH CAROLINA CONTRACTORS' LICENSING LAWS.
2. THE PRIME BIDDER SHALL BE LICENSED TO PERFORM A MINIMUM OF 40% OF THE LICENSED WORK OF THE PROJECT.

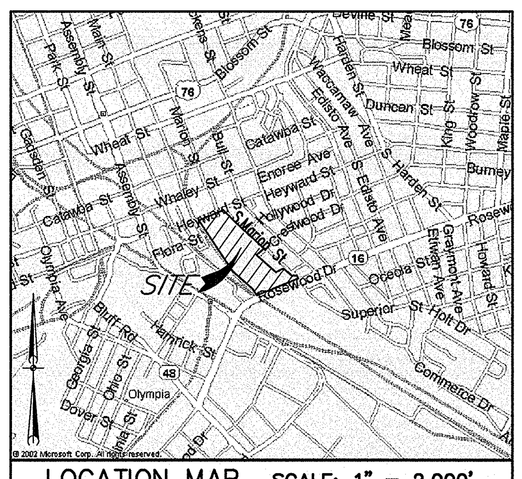


LOCATION MAP SCALE: 1" = 2,000'

SHEET INDEX

| SHEET | SHEET NO. |
|---|---|
| COVER SHEET | |
| EXISTING CONDITIONS & DEMOLITION PLAN | C1 |
| WATER PLAN | C2 |
| WATER DETAILS | C3 |
| ELECTRICAL SITE PLAN | E1 |
| ELECTRICAL SINGLE LINE DIAGRAMS | E2 |
| ELECTRICAL DETAILS | E3 |

OWNER/DEVELOPER

*UNIVERSITY OF SOUTH CAROLINA*
*743 GREENE STREET*
*COLUMBIA, SC 29208*
*TELE: 803-777-5811*
*FAX: 803-777-3126*
*MS. ANN DERRICK*

RMF ENGINEERING, INC.
194 SEVEN FARMS DRIVE
SUITE G
CHARLESTON, SC 29492
PHONE: 843-971-9639
FAX: 843-971-9641
www.rmf.com

SEAL — SOUTH CAROLINA B.P. BARBER & ASSOCIATES, INC. No. C000220 CERTIFICATE OF AUTHORIZATION — DATE 5-14-12

SEAL — CAROLYN ALLINE CHRISTIAN No. 20842 PROFESSIONAL ENGINEER — SIGNATURE

URS
101 Research Drive
Columbia, South Carolina 29203
Telephone (803) 254-4400 : Fax (803) 771-6676
www.URSCorp.com

MAY 14, 2012

PROJECT NO. 46421565

FILE NO. 35,898-B89

N:\PROJECTS\46421565\DWG\UTILITY PLANS\BASE DRAWINGS\EF UTILITY BASELINE 5/14/2012 2:24:04 PM

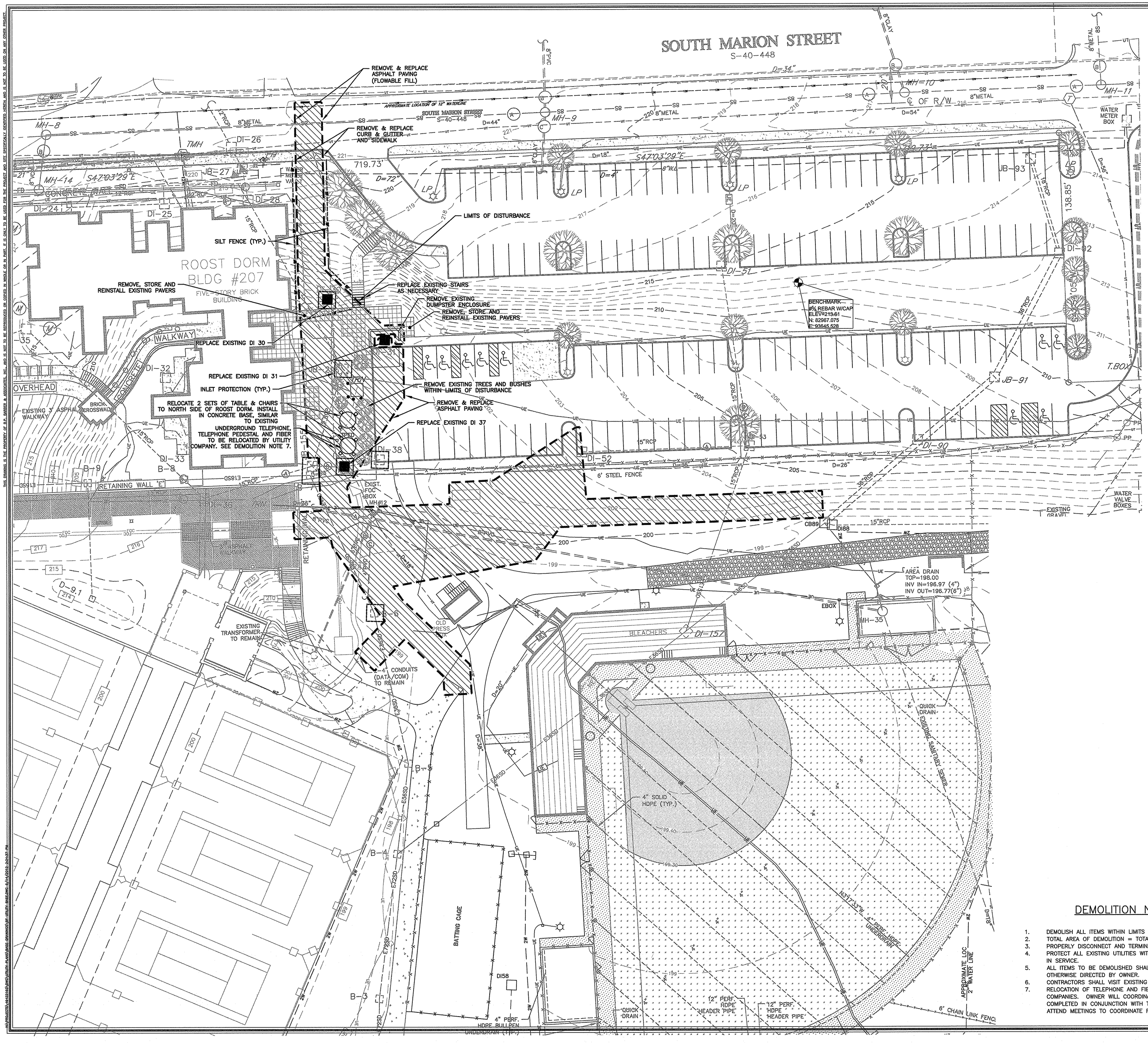


## LEGEND

- SIDEWALK
- BUILDINGS
- STORM DRAIN — N18SD —
- SANITARY SEWER — N8S —
- WATER — N6W —
- CONTOUR — 216 —
- SPOT ELEVATION 199.50
- GRASS
- SKINNED INFIELD
- WARNING TRACK
- LIMITS OF DEMOLITION
- SILT FENCE — SF —
- INLET PROTECTION

## DEMOLITION NOTES

1. DEMOLISH ALL ITEMS WITHIN LIMITS OF DEMOLITION WHICH INTERFERE WITH NEW WORK.
2. TOTAL AREA OF DEMOLITION = TOTAL AREA OF LAND DISTURBANCE = 0.39 ACRE.
3. PROPERLY DISCONNECT AND TERMINATE ALL EXISTING UTILITIES PRIOR TO DEMOLITION.
4. PROTECT ALL EXISTING UTILITIES WITHIN LIMITS OF DEMOLITION WHICH ARE TO REMAIN IN SERVICE.
5. ALL ITEMS TO BE DEMOLISHED SHALL BE PROPERLY DISPOSED OFF-SITE, UNLESS OTHERWISE DIRECTED BY OWNER.
6. CONTRACTORS SHALL VISIT EXISTING SITE PRIOR TO BIDDING.
7. RELOCATION OF TELEPHONE AND FIBER LINES SHALL BE PERFORMED BY UTILITY COMPANIES. OWNER WILL COORDINATE WITH UTILITY COMPANIES TO HAVE RELOCATIONS COMPLETED IN CONJUNCTION WITH THIS WORK. CONTRACTOR MAY BE REQUIRED TO ATTEND MEETINGS TO COORDINATE FINAL PATHWAYS AND ELEVATIONS.

REVISIONS

| NO. | DESCRIPTION | DATE | BY |
|---|---|---|---|

APPROVALS:
PROJECT ENG: CCS
DESIGNED BY: CCS
DRAWN BY: CCS
CHECKED BY: CCS
APPROVED: CCS

STATE OF SOUTH CAROLINA — CERTIFICATE OF AUTHORIZATION — URS CORPORATION No. C00824
DATE 5-14-12

SIGNATURE

RMF ENGINEERING, INC.
194 SEVEN FARMS DRIVE
SUITE G
CHARLESTON, SC 29492
PHONE: 843-971-9639
FAX: 843-971-9641
www.rmf.com

URS
101 Research Drive
Columbia, South Carolina 29203
Telephone (803) 254-4400 : Fax (803) 771-6676
www.URSCorp.com

SHEET TITLE
**EXISTING CONDITIONS & DEMOLITION PLAN**

DATE: MAY 14, 2012 | SCALE: 1"=20'

PROJECT
ATHLETIC VILLAGE INFRASTRUCTURE DEVELOPMENT CONSTRUCTION
**BECKHAM FIELD SITE UTILITIES**
FOR
**UNIVERSITY OF SOUTH CAROLINA**
IN THE CITY OF COLUMBIA — RICHLAND COUNTY, S.C.

.DWG NAME
N.B. NO. 2279
REF. 35,870-B89
PROJECT NO. 46421565

SHEET C1 OF 3

FILE NO. 35,898-B89

THIS DRAWING IS THE PROPERTY OF R.M. HARRIS & ASSOCIATES, INC. AND IS NOT TO BE REPRODUCED OR COPIED IN WHOLE OR IN PART, IT IS ONLY TO BE USED FOR THE PROJECT AND SITE SPECIFICALLY REFERRED, NORTH, AND IS NOT TO BE USED ON ANY OTHER PROJECT.

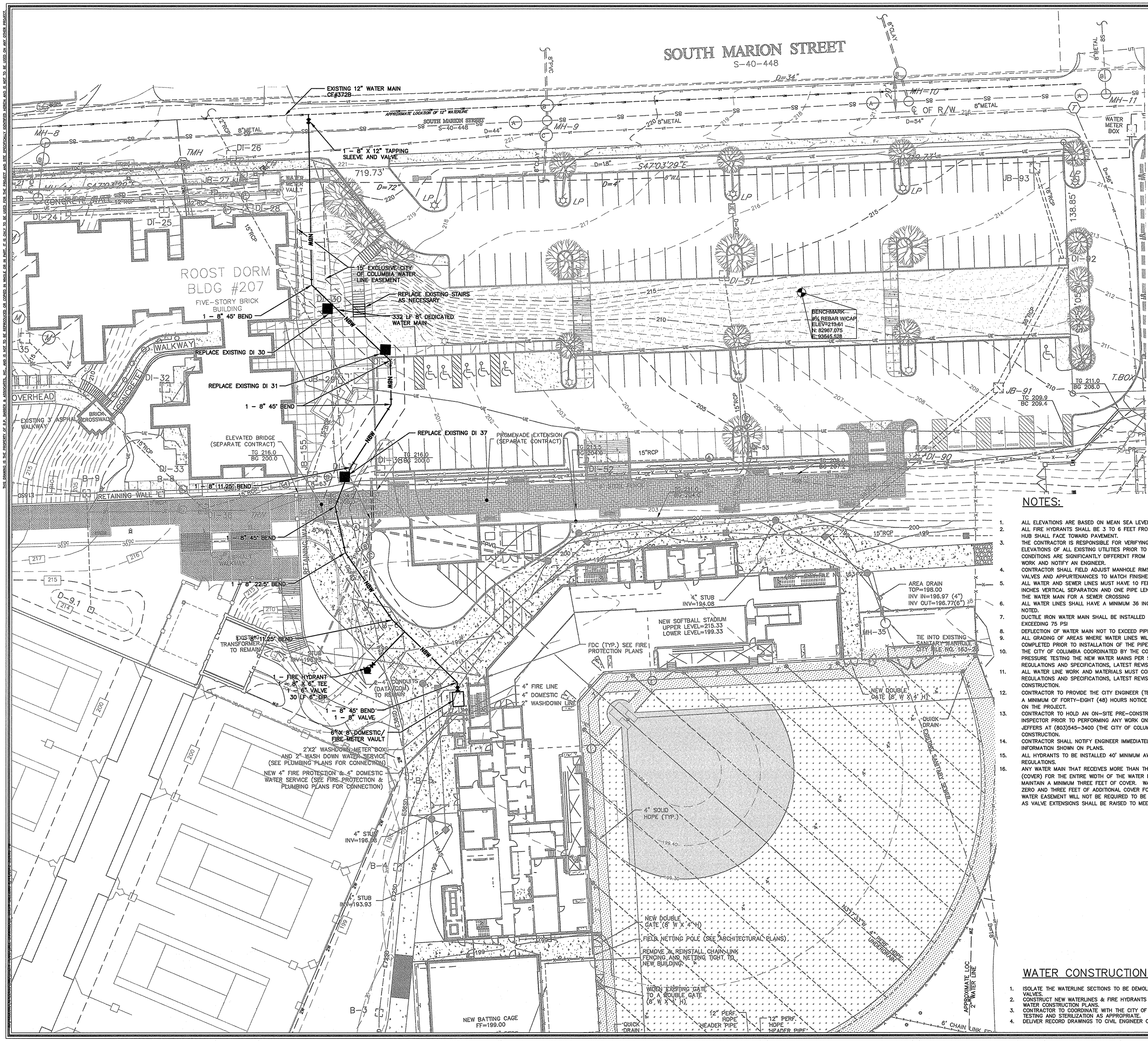


## LEGEND

| | |
|---|---|
| SIDEWALK | |
| BUILDINGS | |
| STORM DRAIN | N18SD |
| SANITARY SEWER | N8S |
| WATER | N6W |
| CONTOUR | 216 |
| EXISTING MH | |
| PROPOSED MH | |
| PROPOSED FH | |
| PROPOSED GV | |

## ENGINEER OF RECORD:


NAME: CHRISTOPHER C. SMITH, P.E.
ADDRESS: 101 RESEARCH DRIVE
COLUMBIA, SC 29202
PHONE: (803) 254-4400
FAX: (803) 771-6676


## PROPERTY OWNER/DEVELOPER:

NAME: UNIVERSITY OF SOUTH CAROLINA
APPLICANT: MRS. ANN DERRICK
ADDRESS: 743 GREENE STREET
COLUMBIA, SC 29208

## NOTES:

1. ALL ELEVATIONS ARE BASED ON MEAN SEA LEVEL DATUM.
2. ALL FIRE HYDRANTS SHALL BE 3 TO 6 FEET FROM THE EDGE OF PAVEMENT. LARGE HUB SHALL FACE TOWARD PAVEMENT.
3. THE CONTRACTOR IS RESPONSIBLE FOR VERIFYING THE EXACT LOCATIONS AND ELEVATIONS OF ALL EXISTING UTILITIES PRIOR TO BEGINNING CONSTRUCTION. IF CONDITIONS ARE SIGNIFICANTLY DIFFERENT FROM THAT SHOWN ON THE PLANS, STOP WORK AND NOTIFY AN ENGINEER.
4. CONTRACTOR SHALL FIELD ADJUST MANHOLE RIMS, CLEANOUTS, FIRE HYDRANTS, VALVES AND APPURTENANCES TO MATCH FINISHED GROUND ELEVATION.
5. ALL WATER AND SEWER LINES MUST HAVE 10 FEET HORIZONTAL SEPARATION, 18 INCHES VERTICAL SEPARATION AND ONE PIPE LENGTH MUST BE CENTERED UNDER THE WATER MAIN FOR A SEWER CROSSING
6. ALL WATER LINES SHALL HAVE A MINIMUM 36 INCHES OF COVER UNLESS OTHERWISE NOTED.
7. DUCTILE IRON WATER MAIN SHALL BE INSTALLED WHERE STATIC PRESSURES EXCEEDING 75 PSI
8. DEFLECTION OF WATER MAIN NOT TO EXCEED PIPE MANUFACTURER'S CRITERIA.
9. ALL GRADING OF AREAS WHERE WATER LINES WILL BE INSTALLED MUST BE COMPLETED PRIOR TO INSTALLATION OF THE PIPE.
10. THE CITY OF COLUMBIA COORDINATED BY THE CONTRACTOR IS RESPONSIBLE FOR PRESSURE TESTING THE NEW WATER MAINS PER S.C.D.H.E.C. AND CITY OF COLUMBIA REGULATIONS AND SPECIFICATIONS, LATEST REVISION.
11. ALL WATER LINE WORK AND MATERIALS MUST CONFORM TO THE CITY OF COLUMBIA REGULATIONS AND SPECIFICATIONS, LATEST REVISION, AT THE BEGINNING OF CONSTRUCTION.
12. CONTRACTOR TO PROVIDE THE CITY ENGINEER (TELEPHONE #:803-545-3400) WITH A MINIMUM OF FORTY-EIGHT (48) HOURS NOTICE PRIOR TO PERFORMING ANY WORK ON THE PROJECT.
13. CONTRACTOR TO HOLD AN ON-SITE PRE-CONSTRUCTION CONFERENCE WITH THE CITY INSPECTOR PRIOR TO PERFORMING ANY WORK ON THE PROJECT. CONTACT JEFF JEFFERS AT (803)545-3400 (THE CITY OF COLUMBIA). FOR APPROVAL PRIOR TO CONSTRUCTION.
14. CONTRACTOR SHALL NOTIFY ENGINEER IMMEDIATELY IF CONDITIONS VARY FROM INFORMATION SHOWN ON PLANS.
15. ALL HYDRANTS TO BE INSTALLED 40' MINIMUM AWAY FROM BUILDINGS PER N.F.P.A. REGULATIONS.
16. ANY WATER MAIN THAT RECEIVES MORE THAN THREE FEET OF ADDITIONAL FILL (COVER) FOR THE ENTIRE WIDTH OF THE WATER EASEMENT SHALL BE RAISED TO MAINTAIN A MINIMUM THREE FEET OF COVER. WATER MAINS THAT RECEIVE BETWEEN ZERO AND THREE FEET OF ADDITIONAL COVER FOR THE ENTIRE WIDTH OF THE WATER EASEMENT WILL NOT BE REQUIRED TO BE RAISED BUT APPURTENANCES SUCH AS VALVE EXTENSIONS SHALL BE RAISED TO MEET NEW GRADE.

## WATER CONSTRUCTION SEQUENCE

1. ISOLATE THE WATERLINE SECTIONS TO BE DEMOLISHED USING ON-SITE VALVES.
2. CONSTRUCT NEW WATERLINES & FIRE HYDRANTS IN ACCORDANCE WITH THE WATER CONSTRUCTION PLANS.
3. CONTRACTOR TO COORDINATE WITH THE CITY OF COLUMBIA TO PERFORM TESTING AND STERILIZATION AS APPROPRIATE.
4. DELIVER RECORD DRAWINGS TO CIVIL ENGINEER OF RECORD.

REVISIONS

| NO. | DESCRIPTION | DATE | BY |
|---|---|---|---|
| | | | |

APPROVALS:
PROJECT ENG. DESIGNED BY: CCS
DRAWN BY: SSJ
CHECKED BY: CCS
APPROVED: CCS

SOUTH CAROLINA URS CORPORATION No. C00028 CERTIFICATE OF AUTHORIZATION
DATE 5-14-12

SOUTH CAROLINA PROFESSIONAL ENGINEER No. 23832 CHRISTOPHER C. SMITH
SIGNATURE


RMF ENGINEERING, INC.
194 SEVEN FARMS DRIVE
SUITE G
CHARLESTON, SC 29492
PHONE: 843-971-9639
FAX: 843-971-9641
www.rmf.com

URS
101 Research Drive
Columbia, South Carolina 29203
Telephone (803) 254-4400 · Fax (803) 771-6676
www.URSCorp.com


SHEET TITLE
# WATER PLAN

SCALE: 1"=20'
DATE: MAY 14, 2012

PROJECT
ATHLETIC VILLAGE INFRASTRUCTURE DEVELOPMENT CONSTRUCTION
BECKHAM FIELD
SITE UTILITIES
FOR
UNIVERSITY OF SOUTH CAROLINA
IN THE CITY OF COLUMBIA RICHLAND COUNTY, S.C.

.DWG NAME
N.B. NO. 2279
REF. 35,870-B89
PROJECT NO. 46421565

SHEET C2 OF 3

FILE NO. 35,898-B89

THIS DRAWING IS THE PROPERTY OF R.M. MARSH & ASSOCIATES, INC., AND IS NOT TO BE REPRODUCED OR COPIED IN WHOLE OR IN PART. IT IS ONLY TO BE USED FOR THE PROJECT AND SITE SPECIFICALLY DESCRIBED HEREIN, AND IS NOT TO BE USED ON ANY OTHER PROJECT.

N:\PROJECTS\46422103\DWG\UTILITY PLANS\BASE DRAWINGS\BF UTILITY BASE.DWG 5/14/2012 3:36:51 PM

THIS DRAWING IS THE PROPERTY OF B.P. BARBER & ASSOCIATES, INC., AND IS NOT TO BE REPRODUCED OR COPIED IN WHOLE OR IN PART. IT IS ONLY TO BE USED FOR THE PROJECT AND SITE SPECIFICALLY IDENTIFIED HEREIN AND IS NOT TO BE USED ON ANY OTHER PROJECT.

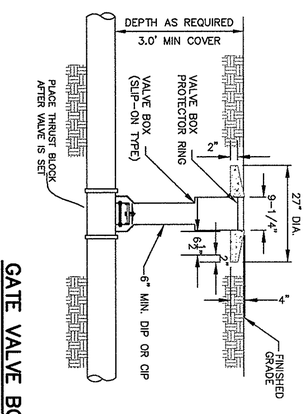


## GATE VALVE BOX DETAIL (1 TYP)
NOT TO SCALE

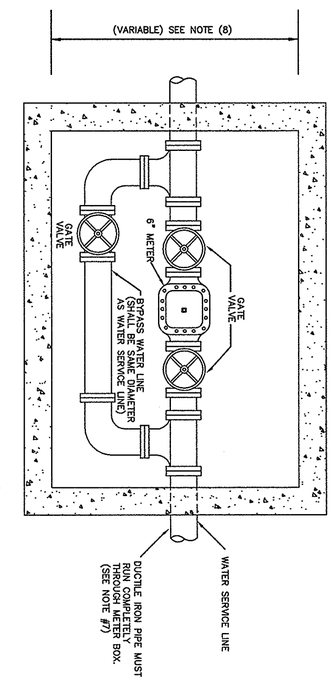


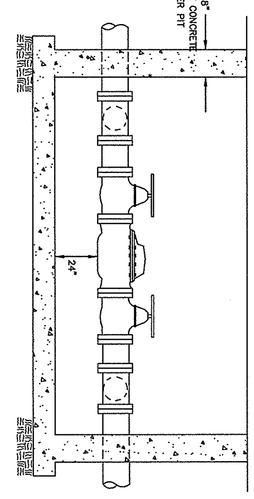


ELEVATION VIEW

(1) METER BOXES 3" AND ABOVE SHALL BE SITE CONSTRUCTED OF THE MATERIALS AND TO THE DIMENSIONS SPECIFIED HEREIN.
(2) METER BOXES CONSTRUCTED WITHIN THE TRAVELED WAY MUST WITHSTAND HEAVY SUPERIMPOSED LOADS. EACH MUST BE DESIGNED TO MEET THE REQUIREMENTS OF THE INDIVIDUAL ENVIRONMENT IN WHICH IT IS TO BE USED. DETAILS/SHOP DRAWINGS AND DESIGN CALCULATIONS MUST BE SUBMITTED AND APPROVED PRIOR TO INSTALLATION OF THE METER.
(3) METER BOXES SHALL BE PROVIDED WITH A COVER FABRICATED FROM FLOOR PLATE STEEL WITH A NON-SKID SURFACE PRIMED AND PAINTED TO COVER ENTIRE BOX. THE COVER SHALL BE ABLE TO WITHSTAND H-20 LOADING.
COVERS MUST HAVE A HINGED 24"X24" INSPECTION LID IN THE CENTER OF THE COVER WITH LIFT HANDLES FOR MANIPULATING THE LID. COVER HANDLES MUST LAY FLAT AND BELOW SURFACE COVER.
(4) THE BOX COVER SHALL BE FLUSH WITH THE SURROUNDING GROUND SURFACE AND SHALL HAVE 2" GUIDES ALONG ADJACENT SIDES TO PREVENT LATERAL MOVEMENT.
(5) THE BOX SHALL BE CONSTRUCTED OF PRECAST CONCRETE.
(6) SIX (6") INCHES OF NO. 5 CRUSHED STONE SHALL BE PLACED IN THE BOTTOM OF EACH BOX. A TWENTY-FOUR (24") INCH CLEARANCE BETWEEN THE TOP OF THE STONE AND THE BOTTOM OF THE METER MUST BE PRESERVED.
(7) DUCTILE IRON PIPE MUST RUN COMPLETELY THROUGH METER BOX.
(8) BACKFLOW PREVENTORS SHALL MEET CITY OF COLUMBIA STANDARDS. CONTRACTOR SHALL SUBMIT SHOP DRAWINGS TO THE ENGINEER FOR APPROVAL PRIOR TO CONSTRUCTION.
(9) ALL METER BOXES SHALL HAVE THE FOLLOWING DIMENSIONS:

| METER SIZE | BOX SIZE | DEPTH |
|---|---|---|
| 3", 4" & 6" | 6' X 8' | AS REQUIRED |
| 8" & 10" | 8' X 10' | AS REQUIRED |

INSIDE DIMENSIONS OF BOX

## TYPICAL METER BOX (4 TYP)
NOT TO SCALE

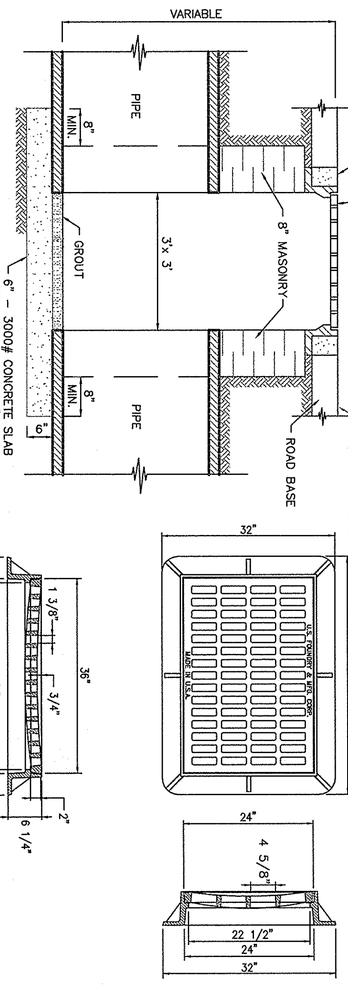


NOTES:
1. FOR PIPES OVER 24" I.D. MAKE LENGTH & WIDTH OF C.B. = O.D. OF PIPE + 6" EACH SIDE.
2. GRATE MODEL NO. USF-6218 (24"x36") TO BE INSTALLED WITH THE LONGEST SIDE PARALLEL TO THE DIRECTION OF FLOW.

## DROP INLET (10 TYP)
NOT TO SCALE

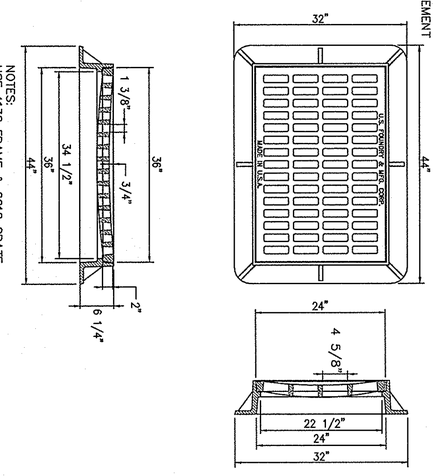


NOTES:
USF 4138 FRAME & 6218 GRATE
1- MATERIAL: ASTM-A48 CLASS 35B GRAY IRON.
2- FRAME WT. 265 LBS. APP.
3- GRATE WT. 225 LBS. APP.




## ROLLED CURB AND GUTTER (7 TYP)
NOT TO SCALE

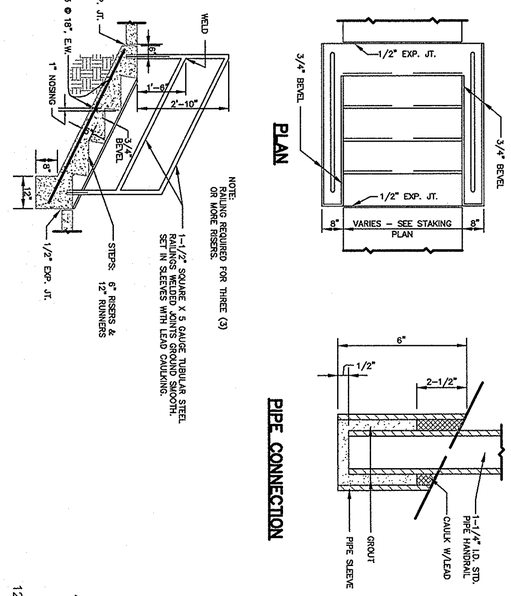


## EXTERIOR CONCRETE STEPS (11 TYP)
NOT TO SCALE

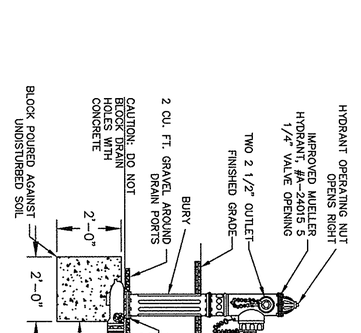


NOTE:
1. ALL JOINTS TO BE MECHANICAL.
2. FOR PIPES SMALLER THAN 3" NOR MORE THAN 6" FROM THE CURB OR THE EDGE OF A HARD SURFACE STREET OR ACCESS ROAD, EXCEPT THAT ALONG RURAL ROADS THROUGH UNDEVELOPED AREAS THE MAXIMUM DISTANCE MAY BE INCREASED TO 10'.
3. HYDRANT MUST BE LOCATED SO AS TO BE UNOBSTRUCTED FOR 15' EITHER SIDE AS MEASURED ALONG THE CURB OR THE PAVEMENT EDGE IN A STRAIGHT LINE. A CLEAR AREA MUST BE FREE OF GROWTH AND OTHER OBSTRUCTIONS WHICH WOULD HINDER ACCESS TO THE HYDRANT.
4. MINIMUM DISTANCE BETWEEN VALVE AND HYDRANT SHALL BE 3'.
5. BENDS MAY BE USED IN HYDRANT LEAD TO FACILITATE LOCATION.
6. GATE VALVES TO OPEN TO THE LEFT.

## HYDRANT ASSEMBLY DETAIL (2 TYP)
SCALE: 3/8" = 1'-0"

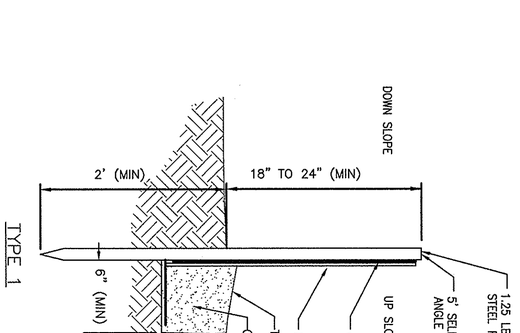


NOTES:
1. USE TYPE 1 IN ALL OTHER CASES. USE TYPE 2 IN AREAS WHERE TOE-IN CUT TRENCH IS DIFFICULT TO EXCAVATE.
2. INSTALL POSTS AT 6' MAXIMUM SPACING.
3. USE WOVEN WIRE WHEN WETLANDS ARE WITHIN 50' OF FENCE.
4. DOUBLE ROW SILT FENCE TO BE PLACED WHERE INDICATED ON PLANS. FENCES SHALL BE 3' APART.
5. SYNTHETIC FILTER FABRIC SHALL BE ON SCDOT APPROVED MATERIALS LIST #34.
6. FILTER FABRIC SHALL BE CUT TO A MINIMUM WIDTH OF 36 INCHES.
7. ATTACH FABRIC TO STEEL POSTS USING HEAVY PLASTIC TIES THAT ARE EVENLY SPACED AND PLACED IN A MANNER TO PREVENT SAGGING OR TEARING OF THE FABRIC. TIES SHOULD BE AFFIXED IN NO LESS THAN 4 PLACES.
8. CONTRACTOR SHALL PERFORM INSPECTION AND MAINTENANCE OF SILT FENCES WITHIN 24 HRS FOLLOWING A RAINFALL EVENT THAT PRODUCES ½" OR MORE OF PRECIPITATION ENSURING FENCES ARE ERECT AND CLEAR, AND REPLACING ALL TORN FENCING.

## SILT FENCE WITH WIRE FABRIC (5 TYP)
NOT TO SCALE

| PIPE SIZE X | CONCRETE BLOCKING DIMENSIONS A | B | C | MBA*2 | *1 |
|---|---|---|---|---|---|
| | (SQ.FT.) | | | | |
| (*DENOTES BRANCH SIZE) TEES | | | | | |
| *2"-6" | 2'-0" | 2'-0" | 1'-4" | 2.7 | 0.13 |
| * 8" | 2'-0" | 2'-6" | 1'-10" | 4.6 | 0.2 |
| * 10" | 2'-6" | 3'-6" | 2'-0" | 7 | 0.39 |
| * 12" | 2'-6" | 4'-6" | 2'-3" | 10.1 | 0.54 |
| 90 DEGREE BENDS | | | | | |
| *2"-6" | 2'-0" | 2'-9" | 1'-3" | 2.4 | 0.16 |
| * 8" | 2'-0" | 3'-3" | 2'-0" | 6.5 | 0.28 |
| * 10" | 2'-6" | 4'-0" | 2'-6" | 10 | 0.53 |
| * 12" | 2'-6" | 5'-0" | 2'-9" | 13.8 | 0.73 |
| 45 DEGREE BENDS | | | | | |
| *2"-6" | 2'-0" | 2'-0" | 1'-0" | 2 | 0.11 |
| * 8" | 2'-0" | 2'-6" | 1'-5" | 3.5 | 0.17 |
| * 10" | 2'-6" | 3'-6" | 1'-6" | 5.2 | 0.29 |
| * 12" | 2'-6" | 4'-6" | 1'-8" | 7.5 | 0.4 |
| 22 1/2 DEGREE BENDS | | | | | |
| *2"-6" | 2'-0" | 1'-0" | 1'-0" | 1 | 0.08 |
| * 8" | 2'-0" | 1'-9" | 1'-0" | 1.7 | 0.11 |
| * 10" | 2'-6" | 2'-3" | 1'-3" | 2.8 | 0.19 |
| * 12" | 2'-6" | 2'-8" | 1'-6" | 3.7 | 0.24 |
| 11 1/4 DEGREE BENDS | | | | | |
| *2"-6" | 2'-0" | 1'-0" | 0'-6" | 0.5 | 0.06 |
| * 8" | 2'-0" | 1'-3" | 0'-9" | 0.9 | 0.08 |
| * 10" | 2'-6" | 1'-6" | 1'-0" | 1.5 | 0.14 |
| * 12" | 2'-6" | 2'-0" | 1'-0" | 2 | 0.17 |

*1 - ESTIMATED C.Y. CONC. FOR TEES AND BENDS
*2 - MINIMUM BEARING AREA (MBA) IS BASED ON SOIL BEARING CAPACITY OF 2000 PSF.

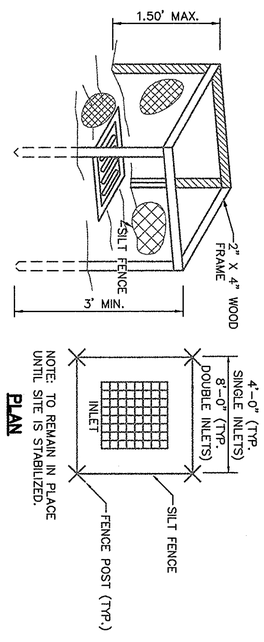


## TEMPORARY INLET PROTECTION (6 TYP)
NOT TO SCALE

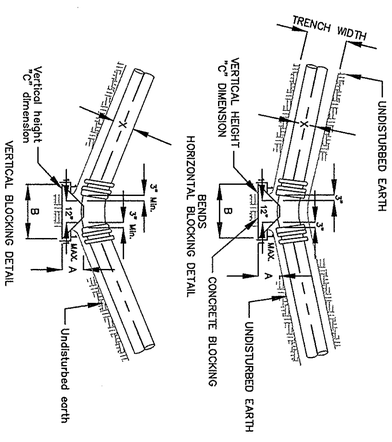


## THRUST BLOCK DETAIL (3 TYP)
NOT TO SCALE

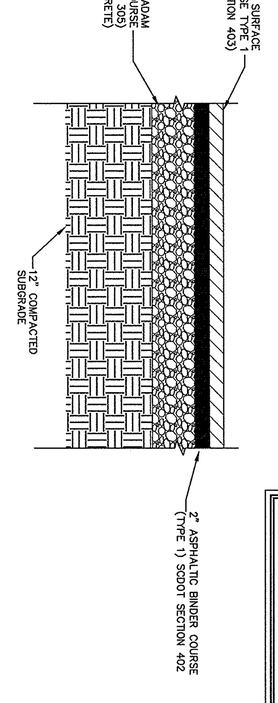


## CONCRETE SIDEWALK (8 TYP)
NOT TO SCALE




## ASPHALTIC PAVEMENT SECTION (9 TYP)
SCALE: 1" = 1'-0"

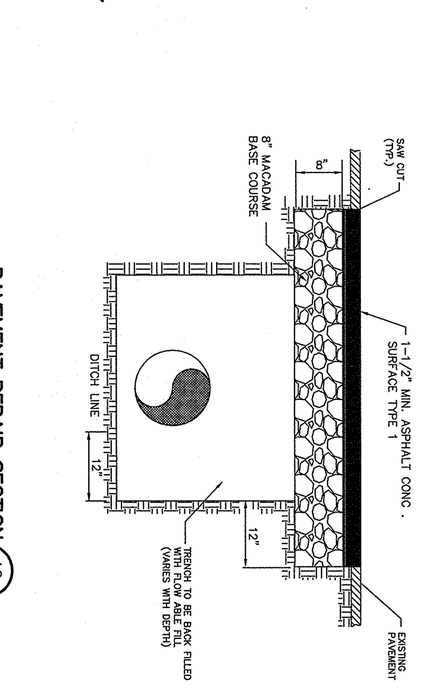


## EXISTING PAVER DETAIL (13 TYP)
NOT TO SCALE




## PAVEMENT REPAIR SECTION (12 TYP)
NOT TO SCALE

RMF ENGINEERING, INC.
194 SEVEN FARMS DRIVE
SUITE G
CHARLESTON, SC 29492
PHONE: 843-971-9639
FAX: 843-971-9641
www.rmf.com

URS
101 Research Drive
Columbia, South Carolina 29203
Telephone (803) 254-4400 : Fax (803) 771-6676
www.URSCorp.com

SOUTH CAROLINA PROFESSIONAL ENGINEER No. 23633 CHRISTOPHER CHARLES SMITH
SIGNATURE

SOUTH CAROLINA URS CORPORATION No. C00934 CERTIFICATE OF AUTHORIZATION
DATE 5-14-12

| APPROVALS | |
|---|---|
| PROJECT ENG: | CCS |
| DESIGNED BY: | CCS |
| DRAWN BY: | SSJ |
| CHECKED BY: | CCS |
| APPROVED: | CCS |

REVISIONS

| NO. | DESCRIPTION | DATE | BY |
|---|---|---|---|
| | | | |

PROJECT
ATHLETIC VILLAGE INFRASTRUCTURE DEVELOPMENT CONSTRUCTION
BECKHAM FIELD
SITE UTILITIES
FOR
UNIVERSITY OF SOUTH CAROLINA
IN THE CITY OF COLUMBIA RICHLAND COUNTY, S.C.

SHEET TITLE
WATER DETAILS

DATE: MAY 14, 2012 SCALE: AS SHOWN

| | |
|---|---|
| DWG NAME | |
| N.B. NO. | 2279 |
| REF. | 35,870-B89 |
| PROJECT NO. | 46421565 |
| SHEET | C3 OF 3 |

FILE NO. 35,898-B89

THIS DRAWING IS THE PROPERTY OF R.P. BARBER & ASSOCIATES, INC., AND IS NOT TO BE REPRODUCED OR COPIED IN WHOLE OR IN PART. IT IS ONLY TO BE USED FOR THE PROJECT AND SITE SPECIFICALLY INDENTED HEREIN AND IS NOT TO BE USED ON ANY OTHER PROJECT.

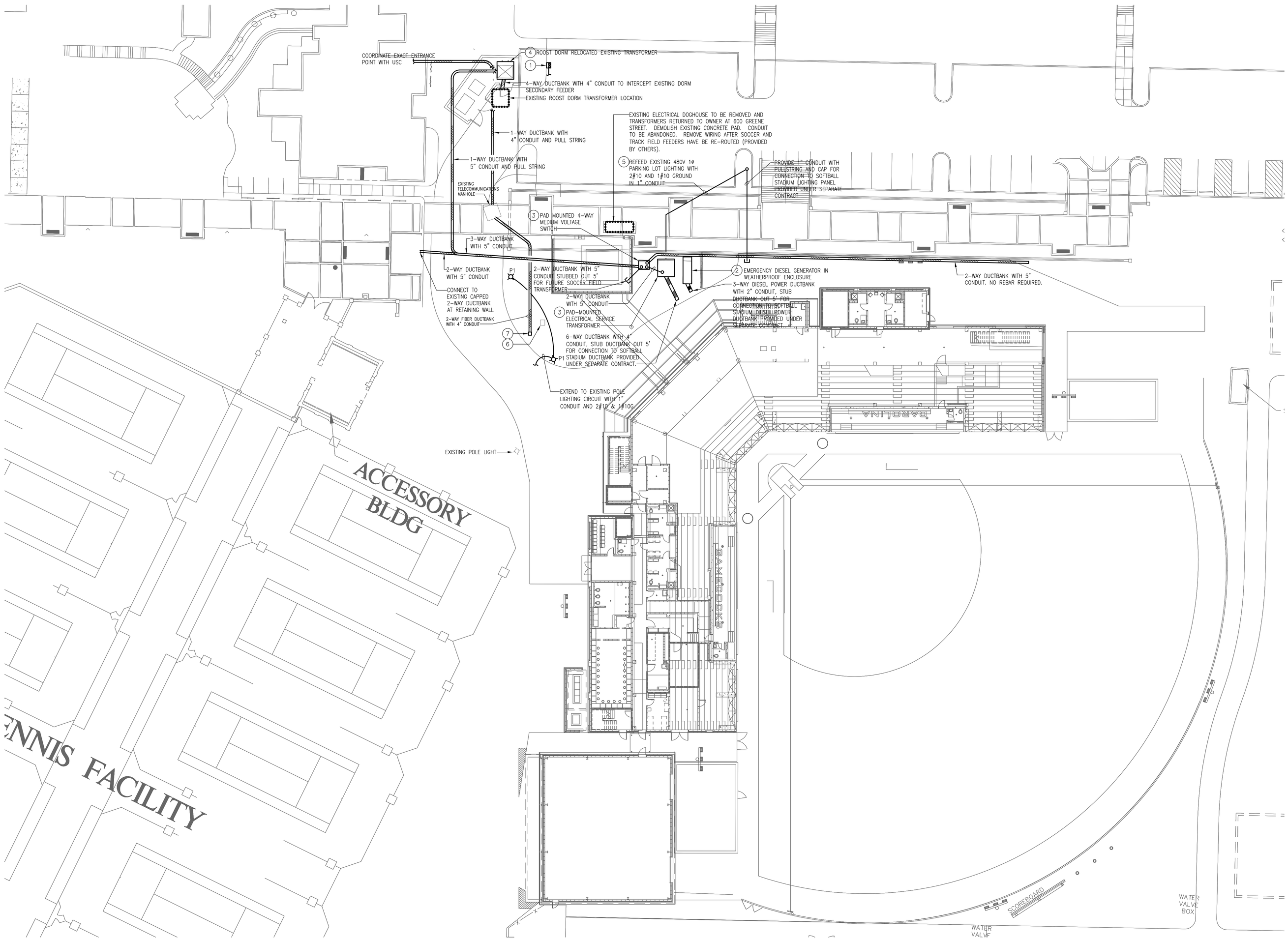


## GENERAL NOTES:

1. ALL CONCRETE USED FOR DUCTBANKS SHALL BE RED COLORED PER USC STANDARD.
2. CONTRACTOR SHALL COORDINATE ALL WORK AND SCHEDULING WITH THE SOFTBALL COMPLEX CONTRACTOR FOR ALL WORK ADJACENT TO THE SOFTBALL COMPLEX.

## DRAWING NOTES:

1. PROVIDE ONE (1) 1" CONDUIT WITH PULL STRING AND 2#10 AND 1#10 GROUND 120V CIRCUIT FROM EXISTING CALL BOX HANDHOLE TO THIS LOCATION FOR FUTURE EMERGENCY CALL STATION. SEE NOTE 6 BELOW FOR LOCATION OF EXISTING CALL BOX HANDHOLE.
2. CONTRACTOR SHALL PROVIDE EQUIPMENT PAD AND SEISMIC MOUNTING HARDWARE. USC WILL BE PROVIDING THE GENERATOR AND WILL DELIVER IT TO THE SITE AND INSTALL ON THE PAD. CONTRACTOR TO PROVIDE SEISMIC BOLTING TO THE PAD BASED ON SHOP DRAWINGS PROVIDED BY USC.
3. EQUIPMENT PROVIDED BY USC, INSTALLED BY CONTRACTOR. CONTRACTOR TO PICK UP EQUIPMENT FROM 600 GREENE STREET AND INSTALL ON EQUIPMENT PAD. SEE DETAIL 1 ON DRAWINGS E3 FOR PAD DETAIL. CONTRACTOR TO PROVIDE SEISMIC BOLTING TO THE PAD BASED ON SHOP DRAWINGS PROVIDED BY USC.
4. PROVIDE CONCRETE PAD AND RELOCATION OF EXISTING TRANSFORMER.
5. PROVIDE 480V, 2P, 30A SERVICE ENTRANCE DISCONNECT FOR TEMPORARY LIGHTING CIRCUIT. MOUNT ON KINDORF SUPPORTS AT THE ISLAND.
6. EXISTING CALL BOX HANDHOLE PROVIDED UNDER SEPARATE CONTRACT.
7. 18"x18"x12" DEEP HANDHOLE FOR CAMPUS FIBER.

GRAPHIC SCALE
20 10 0 20 40
SCALE: 1"=20'-0"
UNIT OF MEASURE: FEET

| REVISIONS | | | |
|---|---|---|---|
| NO. | DESCRIPTION | DATE | BY |

APPROVALS
PROJECT ENG: BAC
DESIGNED BY: PAM
DRAWN BY: PAM
CHECKED BY: BAC
APPROVED: BAC

STATE OF SOUTH CAROLINA REGISTERED PROFESSIONAL ENGINEER BRIAN A. CHARLESTON No. 22 — DATE

STATE OF SOUTH CAROLINA REGISTERED PROFESSIONAL ENGINEER No. 26355 BRIAN A. CHARLESTON — SIGNATURE

DATE

SIGNATURE

RMF ENGINEERING, INC.
194 SEVEN FARMS DRIVE
SUITE G
CHARLESTON, SC 29492
PHONE: 843-971-9639
FAX: 843-971-9641
www.rmf.com
RMF #312122.A0

URS
101 Research Drive
Columbia, South Carolina 29203
Telephone (803) 254-4400 · Fax (803) 771-6676
www.URSCorp.com

SHEET TITLE
# ELECTRICAL SITE PLAN

DATE: MAY 14, 2012
SCALE: 1"=20'-0"

PROJECT
ATHLETIC VILLAGE INFRASTRUCTURE DEVELOPMENT CONSTRUCTION
**BECKHAM FIELD**
**UTILITY PLANS**
FOR
**UNIVERSITY OF SOUTH CAROLINA**
IN THE CITY OF COLUMBIA — RICHLAND COUNTY, S.C.

| | |
|---|---|
| .DWG NAME | |
| N.B. NO. 2279 | SHEET E1 |
| REF. 35,870-B89 | OF 3 |
| PROJECT NO. 46421565 | |

FILE NO. 35,803-B89

THIS DRAWING IS THE PROPERTY OF B.P. BARBER & ASSOCIATES, INC., AND IS NOT TO BE REPRODUCED OR COPIED IN WHOLE OR IN PART. IT IS ONLY TO BE USED FOR THE PROJECT AND SITE SPECIFICALLY IDENTIFIED HEREIN AND IS NOT TO BE USED ON ANY OTHER PROJECT.

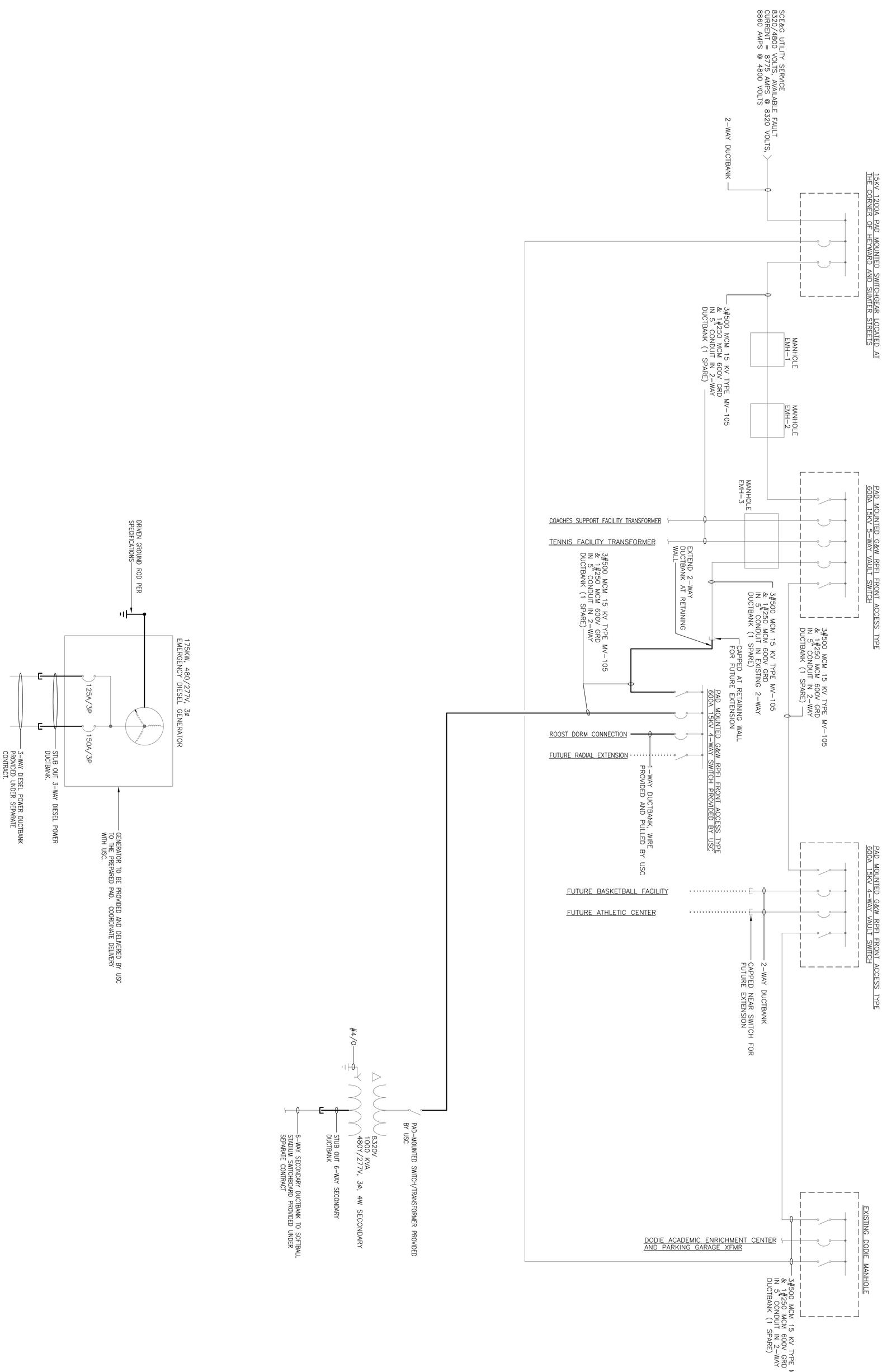


GENERAL NOTES:

1. FINAL CONNECTIONS TO TRANSFORMER AND MEDIUM VOLTAGE SWITCH BY USC.

RMF ENGINEERING, INC.
194 SEVEN FARMS DRIVE
SUITE G
CHARLESTON, SC 29492
PHONE: 843-971-9639
FAX: 843-971-9641
www.rmf.com
RMF #312122.A0

SOUTH CAROLINA PROFESSIONAL ENGINEER No. 26365 BENJAMIN A. CRUTCHFIELD

SIGNATURE

STATE OF SOUTH CAROLINA RMF ENGINEERING INC. CHARLESTON, SC C-00831 REGISTERED ENGINEERS

DATE

URS
101 Research Drive
Columbia, South Carolina 29203
Telephone (803) 254-4400 : Fax (803) 771-6676
www.URSCorp.com

SIGNATURE

DATE

APPROVALS

| | |
|---|---|
| PROJECT ENG: | BAC |
| DESIGNED BY: | PAM |
| DRAWN BY: | PAM |
| CHECKED BY: | BAC |
| APPROVED: | BAC |

REVISIONS

| NO. | DESCRIPTION | DATE | BY |
|---|---|---|---|
| | | | |

PROJECT
ATHLETIC VILLAGE INFRASTRUCTURE DEVELOPMENT CONSTRUCTION
**BECKHAM FIELD**
**UTILITY PLANS**
FOR
**UNIVERSITY OF SOUTH CAROLINA**
IN THE CITY OF COLUMBIA RICHLAND COUNTY, S.C.

SHEET TITLE
ELECTRICAL SINGLE LINE DIAGRAMS

DATE: MAY 14, 2012 SCALE: NONE

DWG NAME
N.B. NO. 2279
REF: 35,870-B89
PROJECT NO. 46421565
SHEET E2 OF 3

FILE NO. 35,803-B89

THIS DRAWING IS THE PROPERTY OF R.P. BARBER & ASSOCIATES, INC., AND IS NOT TO BE REPRODUCED OR COPIED IN WHOLE OR IN PART. IT IS ONLY TO BE USED FOR THE PROJECT AND SITE SPECIFICALLY IDENTIFIED HEREIN AND IS NOT TO BE USED ON ANY OTHER PROJECT.

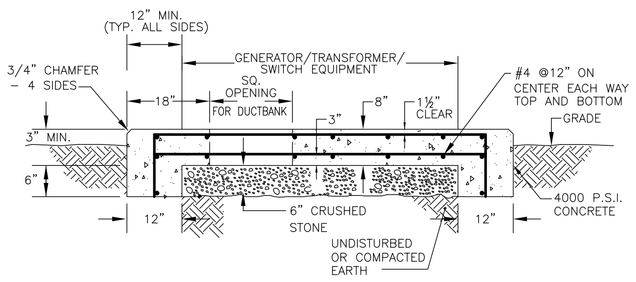


NOTES:

1. SEE UTILITY SITE PLAN FOR ELECTRIC DUCTBANK LAYOUT TO GENERATOR.
2. CONTRACTOR SHALL VERIFY PAD DIMENSIONS WITH EQUIPMENT PRIOR TO CONSTRUCTION OF PAD.
3. SEE GROUNDING DETAIL ON DRAWING E401.

## DETAIL – GENERATOR/TRANSFORMER/SWITCH PAD

SCALE: NONE (1)

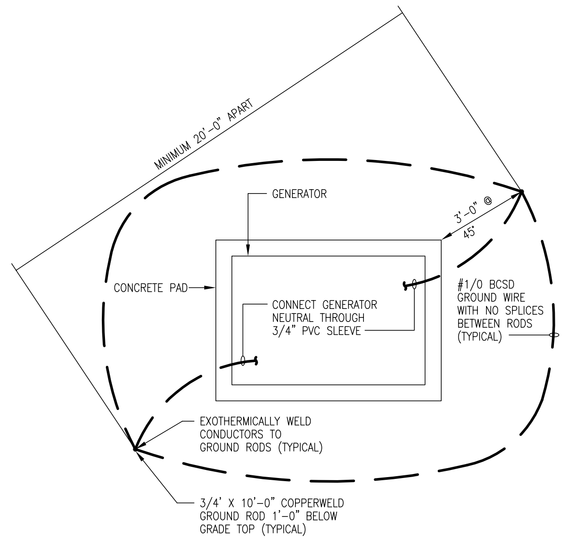


## DETAIL – OUTDOOR EQUIPMENT GROUNDING

SCALE: NONE (2)

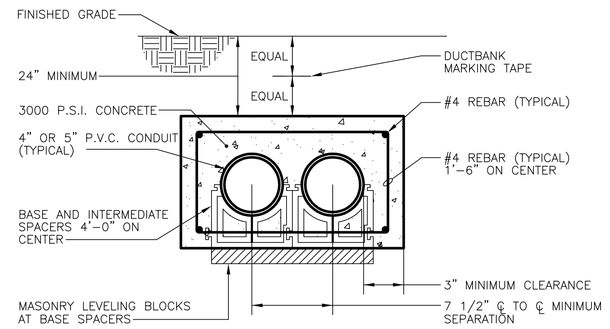


NOTE: REBAR REQUIRED UNLESS OTHERWISE NOTED ON PLANS

## DETAIL – 2-WAY DUCTBANK 4" AND 5" CONDUIT

SCALE: NONE (3)

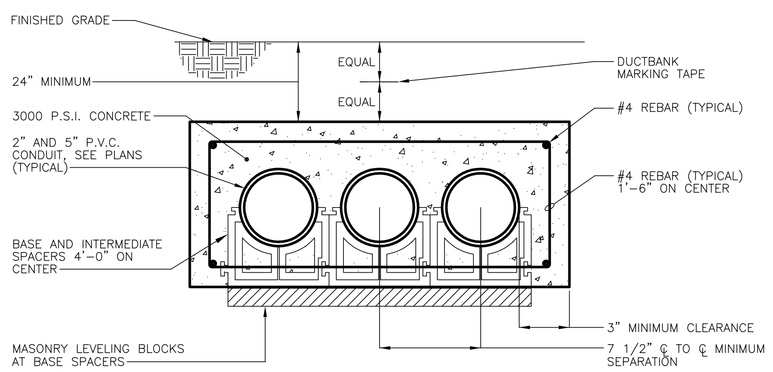


NOTE: REBAR REQUIRED UNLESS OTHERWISE NOTED ON PLANS

## DETAIL – 3-WAY DUCTBANK 2" & 5" CONDUIT

SCALE: NONE (4)

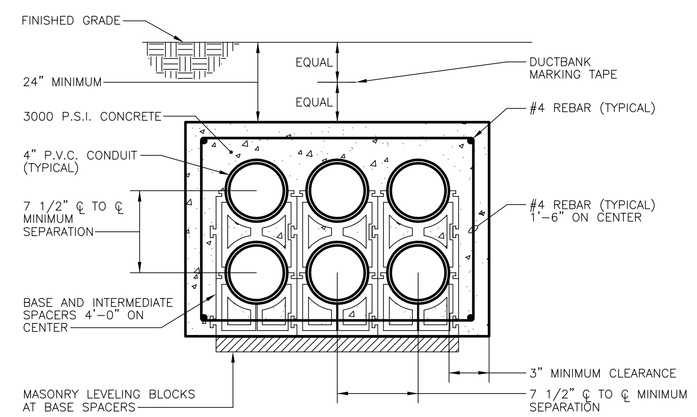


NOTE: REBAR REQUIRED UNLESS OTHERWISE NOTED ON PLANS

## DETAIL – 6-WAY DUCTBANK 4" CONDUIT

SCALE: NONE (5)

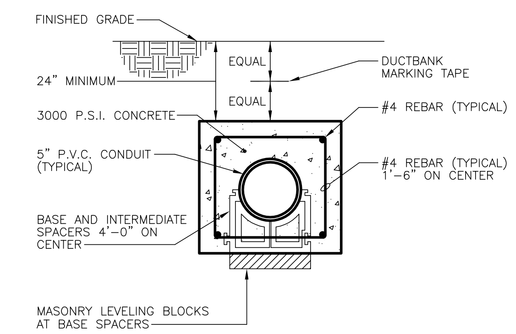


NOTE: REBAR REQUIRED UNLESS OTHERWISE NOTED ON PLANS

## DETAIL – 1-WAY DUCTBANK 5" CONDUIT

SCALE: NONE (6)

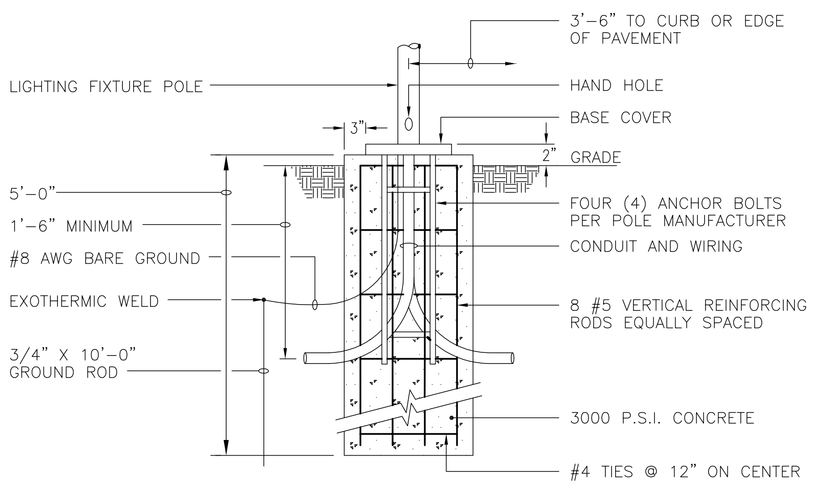


## DETAIL – POLE BASE

SCALE: NONE (7)

### LIGHTING FIXTURE SCHEDULE

| FIXTURE TYPE | DESCRIPTION | LOUVER/ LENS | LAMPS | | | | BALLAST | | VOLTAGE | INPUT WATTAGE | MOUNTING | REMARKS | MANUFACTURER | FIXTURE TYPE |
|---|---|---|---|---|---|---|---|---|---|---|---|---|---|---|
| | | | TYPE | WATTAGE | QTY. | COLOR TEMP. | TYPE | QTY. | | | | | | |
| P1 | POLE MOUNTED LIGHTING FIXTURE | – | MH | 150 | 1 | 3500°K | ELECTRONIC PULSE START | 1 | 277 | 168 | POLE | MOUNTED ON 14' POLE, SINGLE HEAD WITH IES CUT OFF OPTION. PROVIDE POLE BY STERNBERG, CATALOG NUMBER 5214FP5 WITH CUSTOM FINISH RAL #7026. | STERNBERG# MS805B-3-R05-FHC-150PSMH-MED-277-CA-CM-RAL7026 | P1 |

### POWER SYMBOLS

| SYMBOL | DESCRIPTIONS | MH (UON) |
|---|---|---|
| | NON-FUSED DISCONNECT SWITCH, 30A, 3P (UNLESS OTHERWISE NOTED) | |
| | PANELBOARD | |
| | DISTRIBUTION PANELBOARD | |
| T | TRANSFORMER | |
| | CIRCUIT CONCEALED IN WALLS OR CEILING SPACE. CONDUCTORS SHALL BE MINIMUM 2#12 AWG AND 1#12 AWG GROUND IN 3/4" CONDUIT, (UNLESS OTHERWISE NOTED) | |
| | RACEWAY CONCEALED IN SLAB OR BELOW GRADE. | |
| | BRANCH CIRCUIT HOMERUN TO PANELBOARD. QUANTITY OF CIRCUITS INDICATED BY ARROWS ( ). NUMBER OF CONDUCTORS SHALL BE MINIMUM 4#12 AWG AND 1#12 AWG GROUND IN 3/4" CONDUIT, (UNLESS OTHERWISE NOTED) | |
| | RACEWAY RUN EXPOSED. CONDUCTORS SHALL BE MINIMUM 2#12 AWG AND 1#12 AWG IN 3/4" CONDUIT, (UNLESS OTHERWISE NOTED) | |

### LIGHTING SYMBOLS

| SYMBOL | DESCRIPTIONS | MH (UON) |
|---|---|---|
| | POLE MOUNTED LIGHTING FIXTURE– SINGLE, POLE TOP | |

### CIRCUIT DESIGNATIONS

LIGHTING — A # a

- FIXTURE TYPE
- *CIRCUIT DESIGNATION
- SWITCH DESIGNATION

POWER — #

- *CIRCUIT DESIGNATION

* SEE NOTES FOR PANEL DESIGNATIONS FOR EACH AREA.

### EQUIPMENT DESIGNATIONS

| DESIGNATION | DESCRIPTIONS |
|---|---|
| SWGR | SWITCHGEAR |
| SWBD | SWITCHBOARD |
| PNL | PANELBOARD |
| MCC | MOTOR CONTROL CENTER |
| XFMR | TRANSFORMER |

### ELECTRICAL DRAWING PRESENTATION

| SYMBOL | DESCRIPTIONS |
|---|---|
| 2 | REVISION NUMBER 2 |
| 2 | DRAWING NOTE NUMBER 2 |
| 22A | EQUIPMENT TAG NUMBER – REFER TO EQUIPMENT SCHEDULE |
| X / XX / XX | SECTION/ELEVATION IDENTIFICATION |
| X / XX | PART PLAN AND DETAIL IDENTIFICATION |
| | EXISTING LINE TYPE |
| | NEW ELECTRICAL WORK LINE TYPE |
| | FUTURE ELECTRICAL WORK LINE TYPE |
| | DEMOLITION LINE TYPE ON DEMOLITION DRAWINGS |

GENERAL NOTES:

1. THIS IS A STANDARD SYMBOL LIST, SOME SYMBOLS MAY NOT APPEAR ON THE ACCOMPANYING DRAWINGS.
2. REFER TO SPECIFICATIONS FOR DETAILED REQUIREMENTS.



SHORT DESCRIPTION:
TYPE P1/P2 ON DRAWING
LANTERN-SHAPED GLASS GLOBE
LAMP: 150W PULSE START METAL HALIIDE
MOUNTING HEIGHT: 14' (POLE HEIGHT: 14')

FIXTURE P1
SCALE: NONE

REVISIONS

| NO. | DESCRIPTION | DATE | BY |
|---|---|---|---|
| | | | |

APPROVALS
PROJECT ENG: BAC
DESIGNED BY: PAM
DRAWN BY: PAM
CHECKED BY: BAC
APPROVED: BAC

STATE OF SOUTH CAROLINA — REGISTERED PROFESSIONAL ENGINEER — RMF ENGINEERING, INC. CHARLESTON, SC — DATE

STATE OF SOUTH CAROLINA — REGISTERED PROFESSIONAL ENGINEER — No. 26395 — SIGNATURE

DATE

SIGNATURE

RMF ENGINEERING, INC.
194 SEVEN FARMS DRIVE
SUITE G
CHARLESTON, SC 29492
PHONE: 843-971-9639
FAX: 843-971-9641
www.rmf.com
RMF #31212.A0

URS
101 Research Drive
Columbia, South Carolina 29203
Telephone (803) 254-4400 : Fax (803) 771-6676
www.URSCorp.com

SHEET TITLE: ELECTRICAL DETAILS, SCHEDULE AND LEGEND

SCALE: XXX

DATE: MAY 14, 2012

PROJECT: ATHLETIC VILLAGE INFRASTRUCTURE DEVELOPMENT CONSTRUCTION
BECKHAM FIELD
UTILITY PLANS
FOR
UNIVERSITY OF SOUTH CAROLINA
IN THE CITY OF COLUMBIA — RICHLAND COUNTY, S.C.

| | |
|---|---|
| .DWG NAME | |
| N.B. NO. 2279 | SHEET E3 |
| REF. 35,870–B89 | OF 3 |
| PROJECT NO. 46421565 | |

FILE NO. 35,803–B89